# Claas Dominator 88 VX

# Зміст

1. Кабіна.....3
2. Похила камера.....64
3. Система обмолоту.....81
4. Елеватори.....103
5. Січкарня.....119
6. Ходова частина.....130
7. Корпусні частини.....178
8. Гідравлічна система.....219
9. Двигун.....262
10. Ремні.....290

AGRODRUZI

# Fahrerstand

AGROHUZI

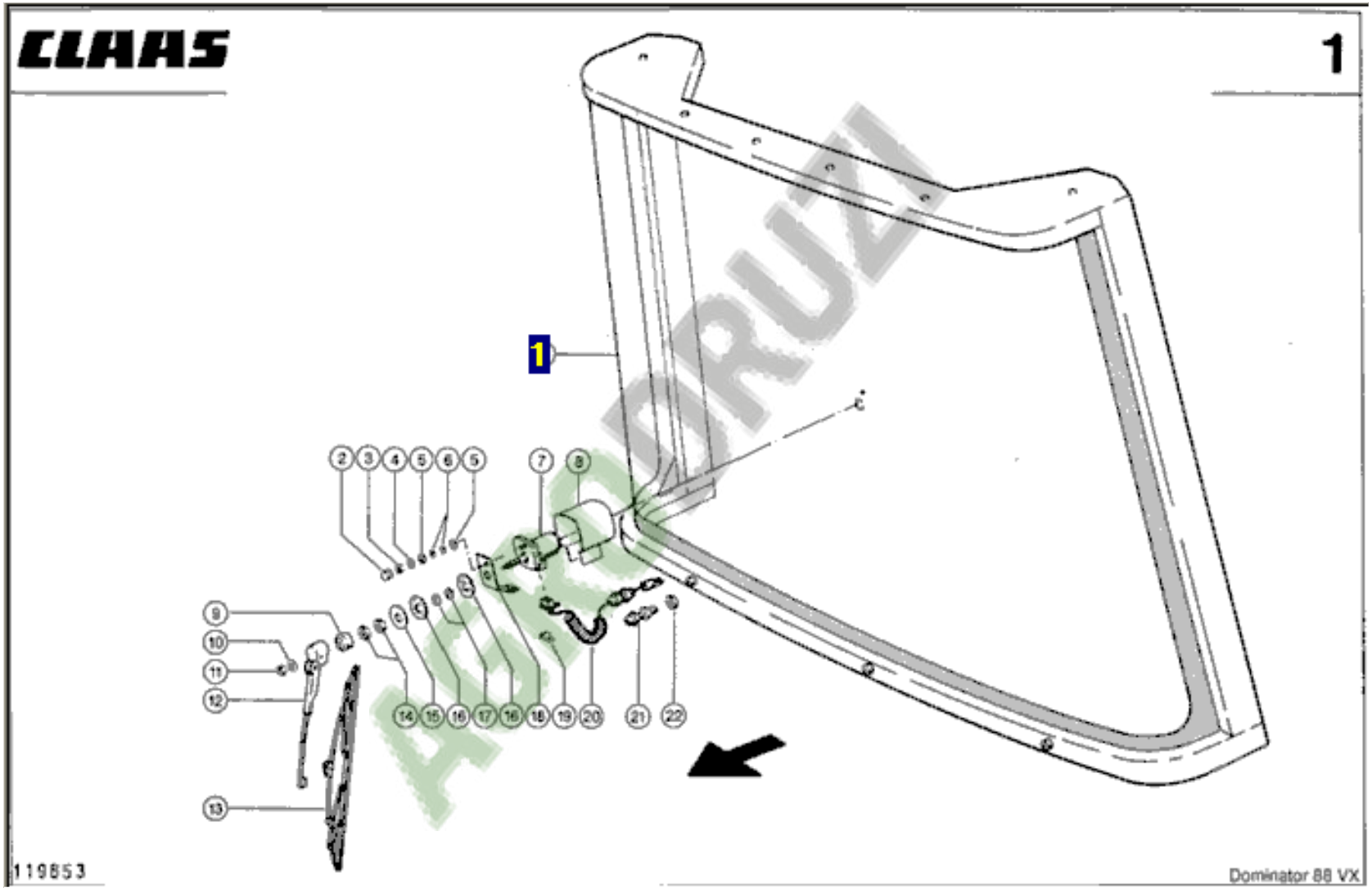
CLAAS
1
1
2
3
4
5
6
5
7
8
9
10
11
12
13
14
15
16
17
18
19
20
21
22
119853
Dominator 88 VX

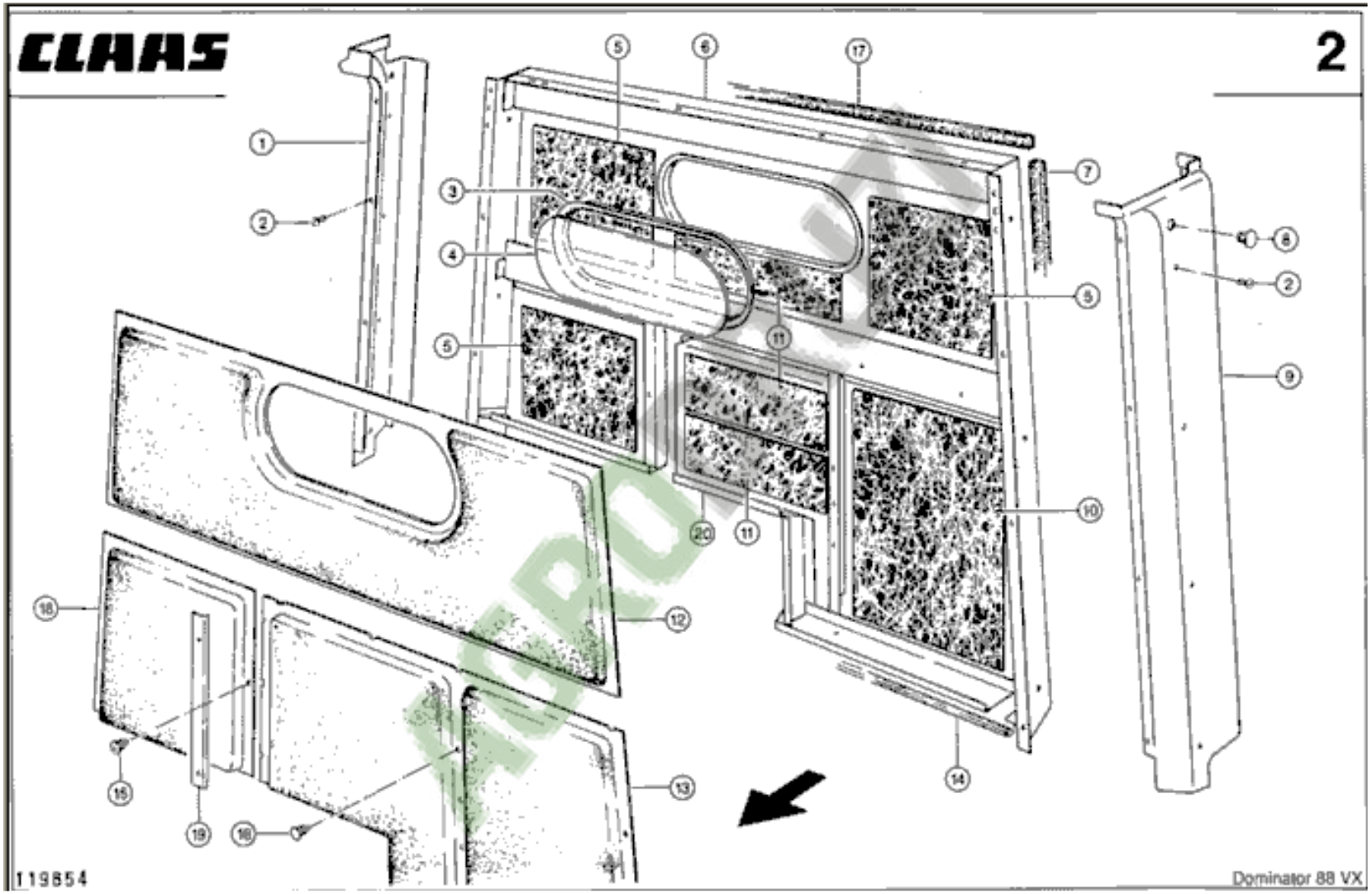
CLAAS
2
119854
Dominator 88 VX

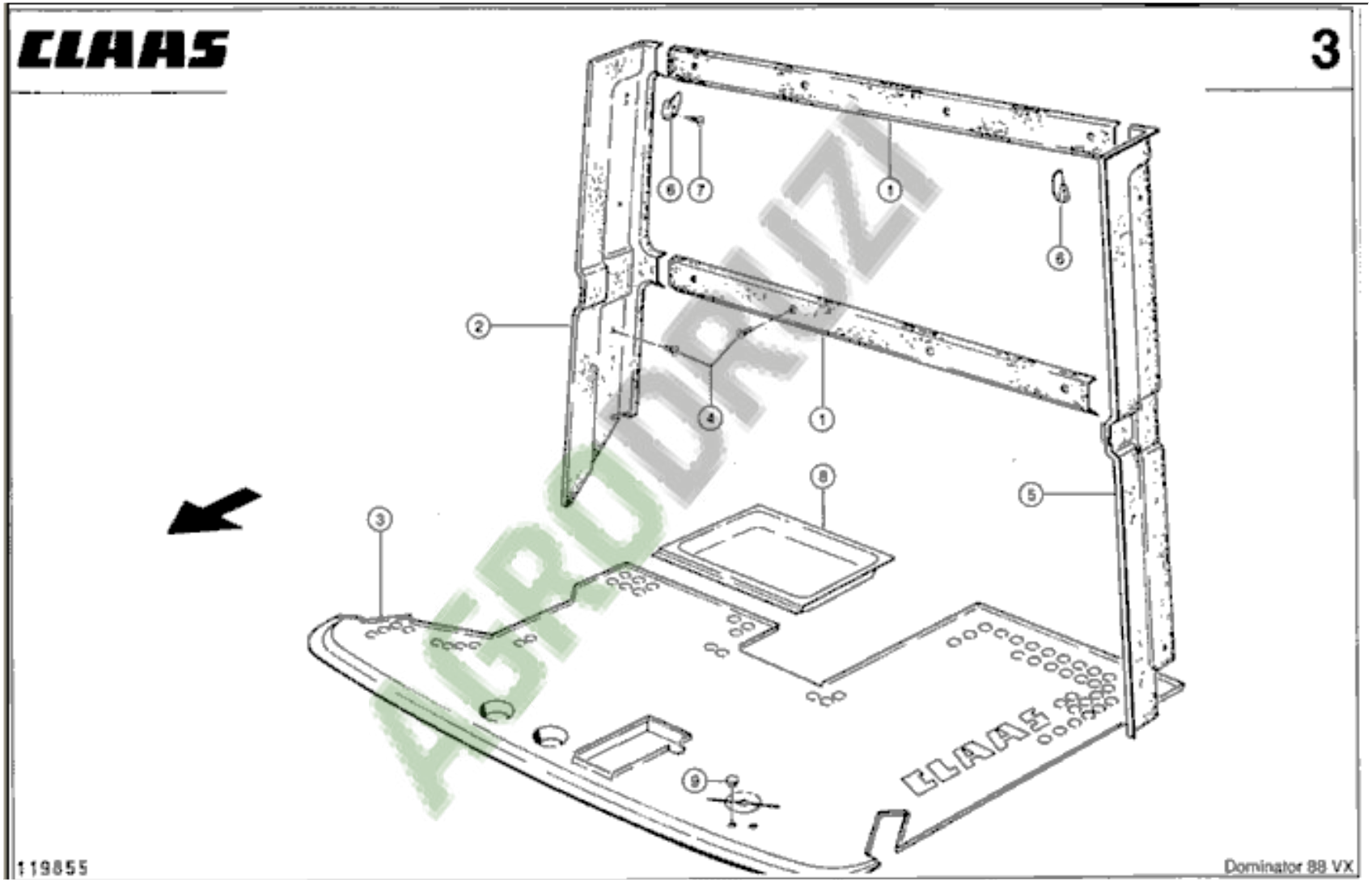


AGRODRUZ

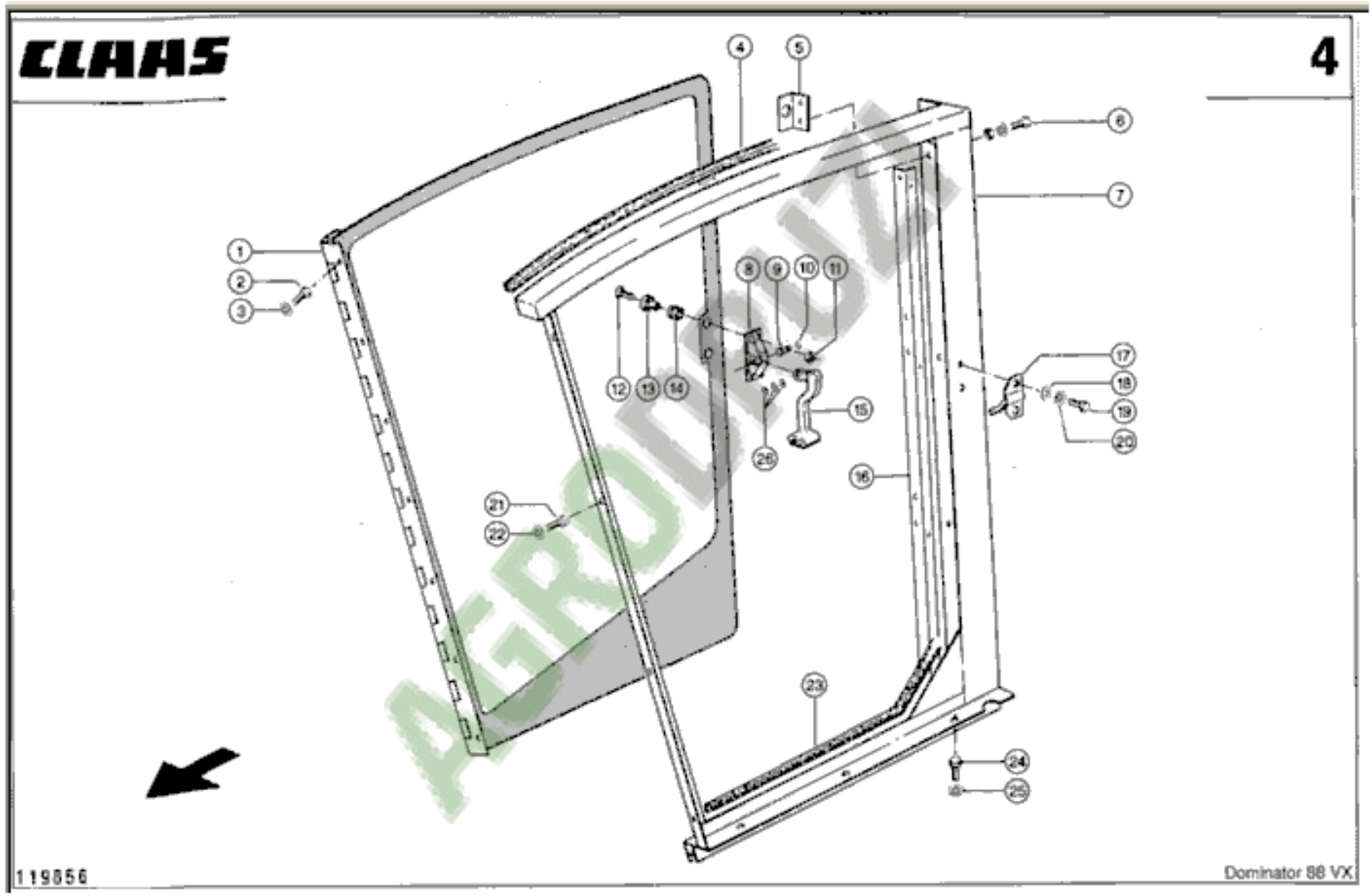
CLAAS
4
1
2
3
4
5
6
7
8
9
10
11
12
13
14
15
16
17
18
19
20
21
22
23
24
25
26
119856
Dominator 88 VX

AGRODIUZ

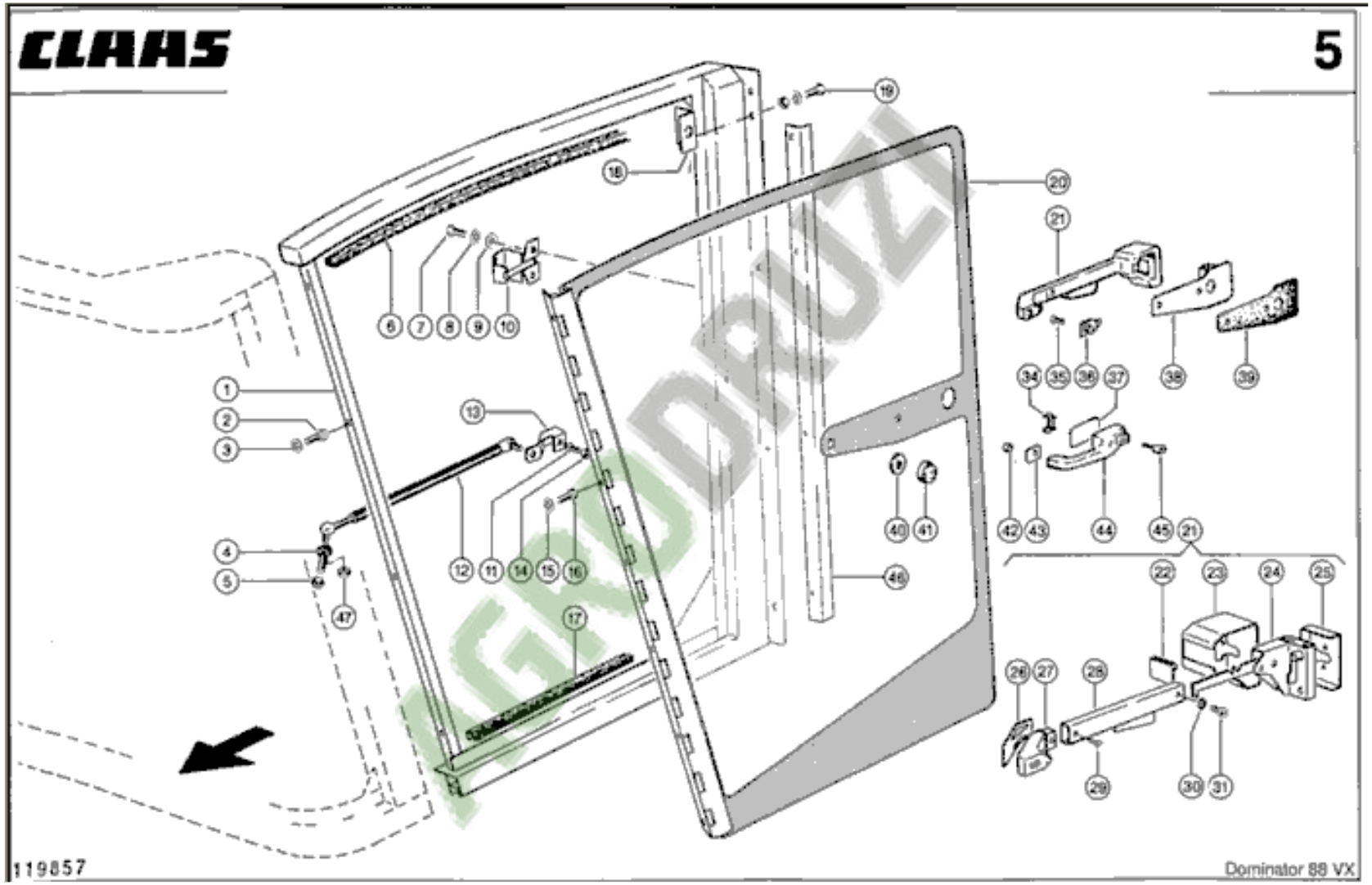
CLAAS
5
119857
Dominator 88 VX

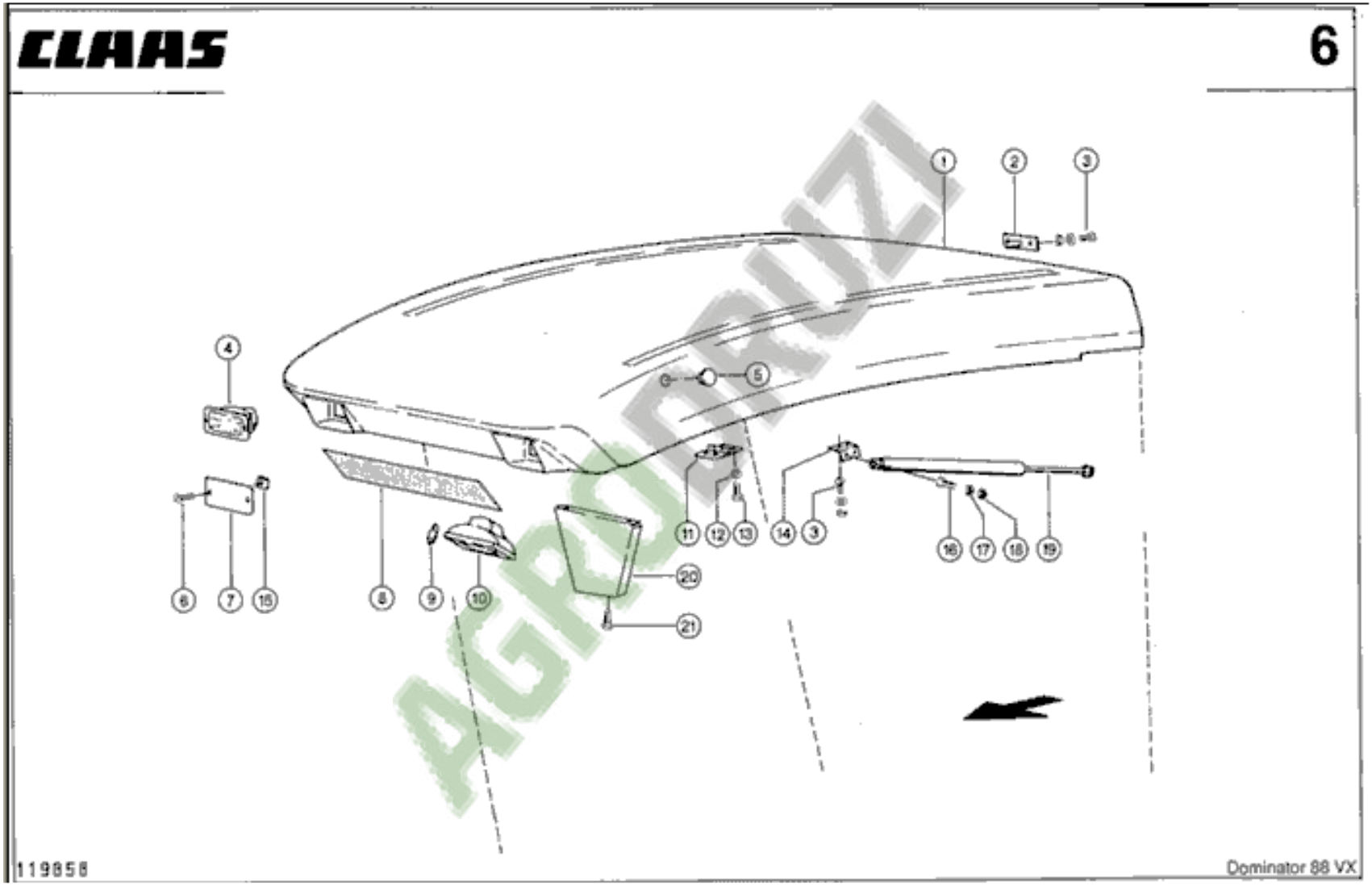
CLAAS
6
1
2
3
4
5
6
7
15
8
9
10
11
12
13
14
3
16
17
18
19
20
21
119858
Dominator 88 VX

AGRODRUZI

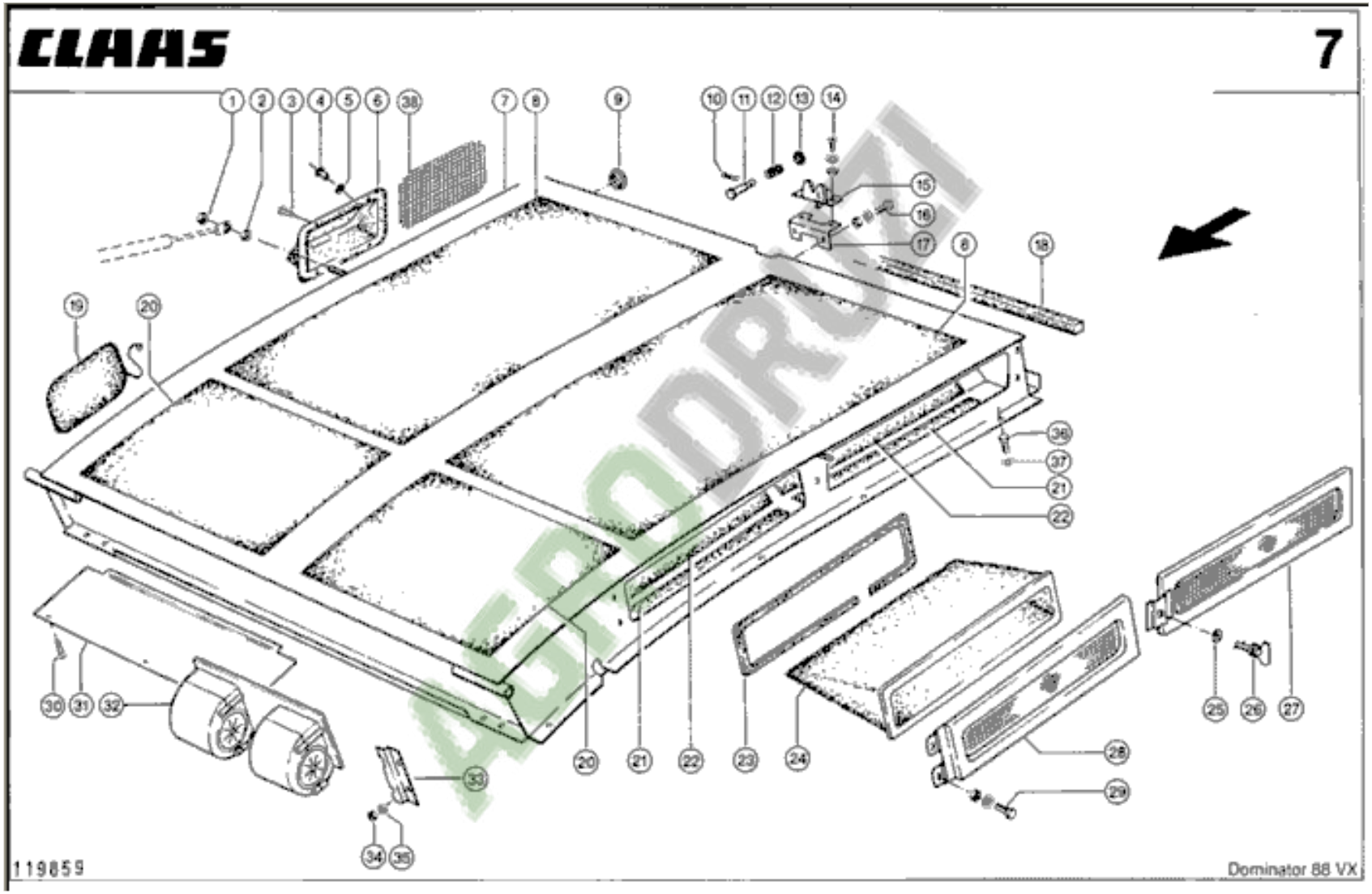
CLAAS
7
119859
Dominator 88 VX

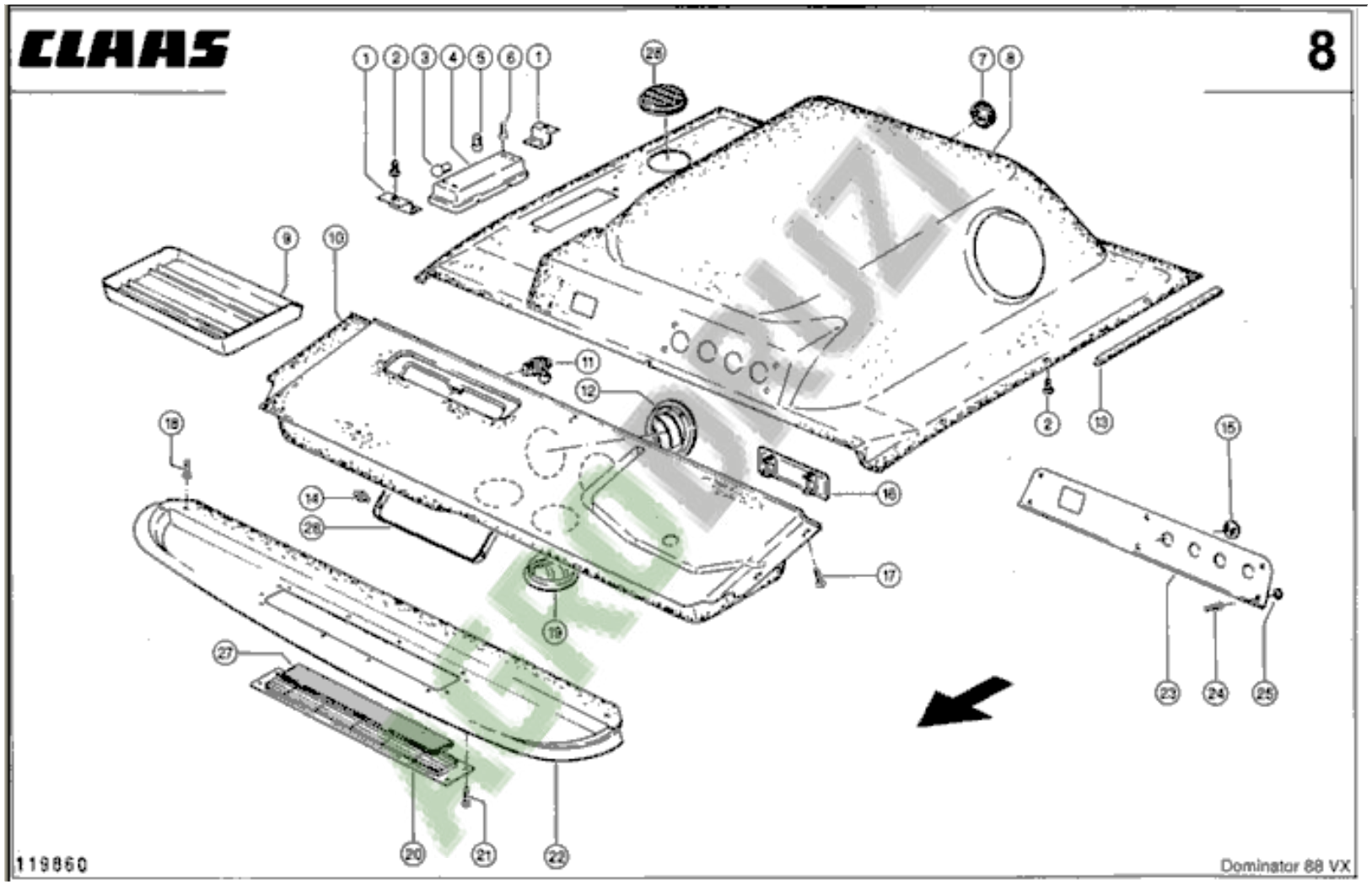
CLAAS
8
119860
Dominator 88 VX

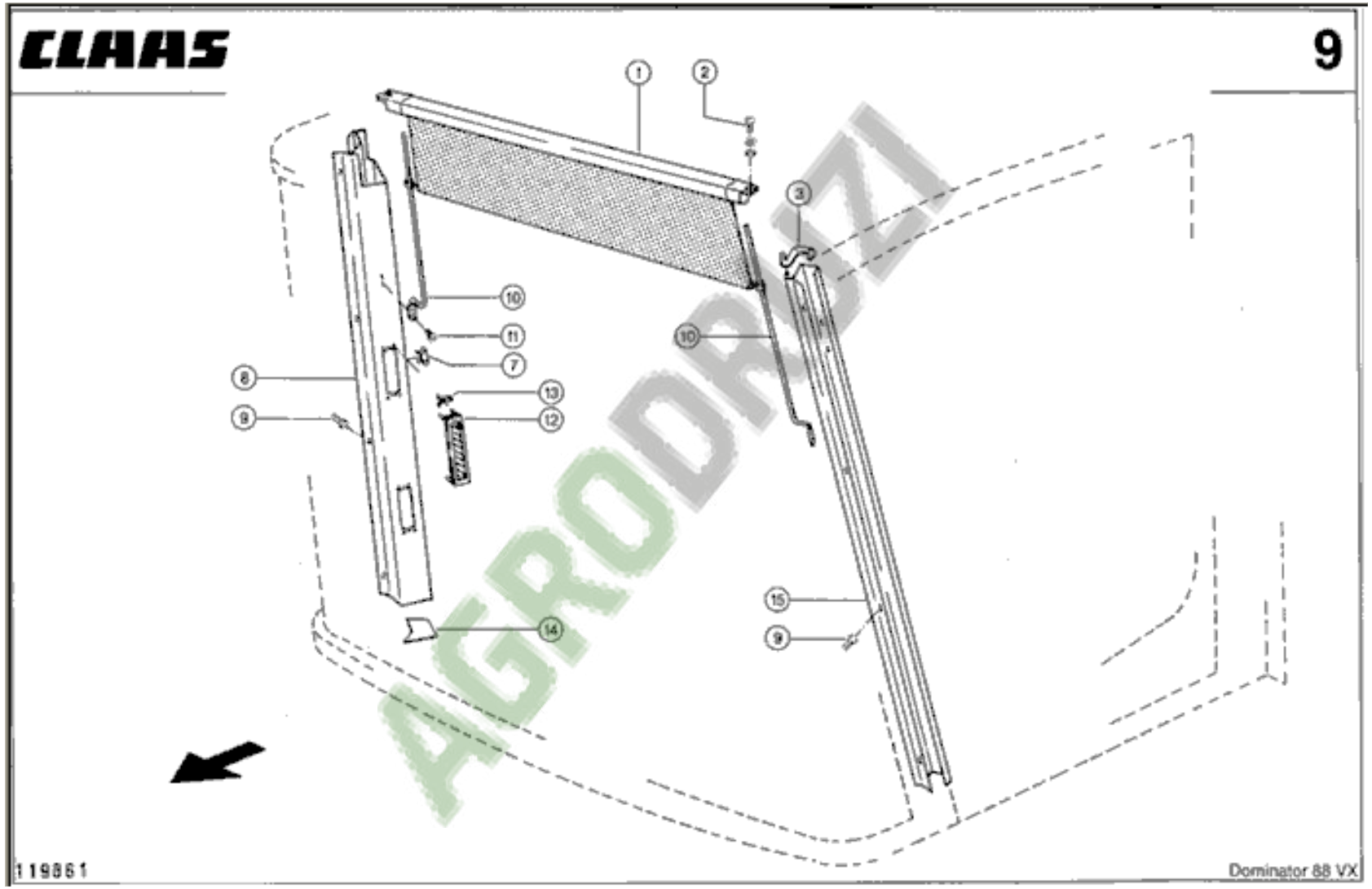


AGRODRZI

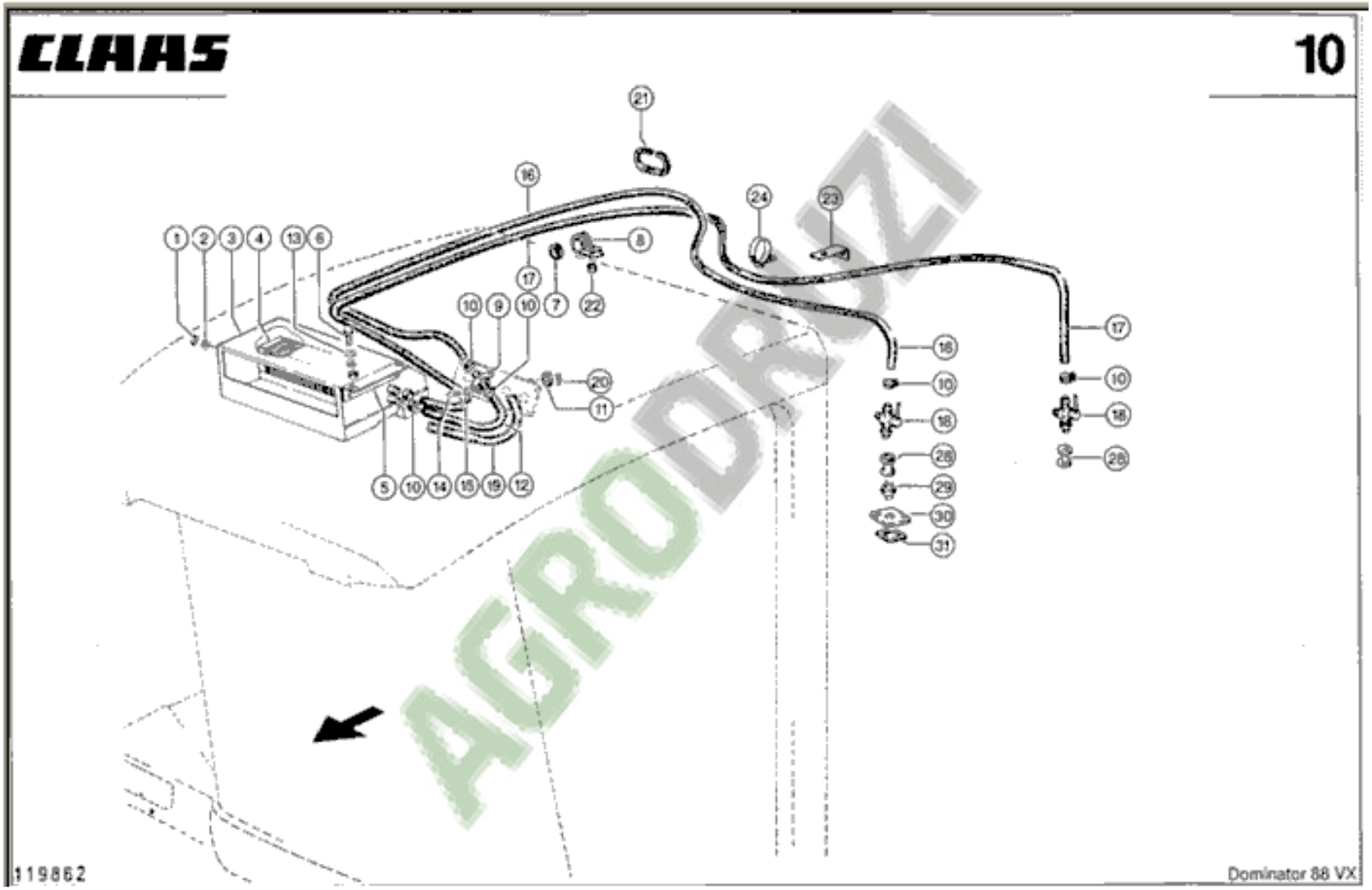


AGRODRUZI

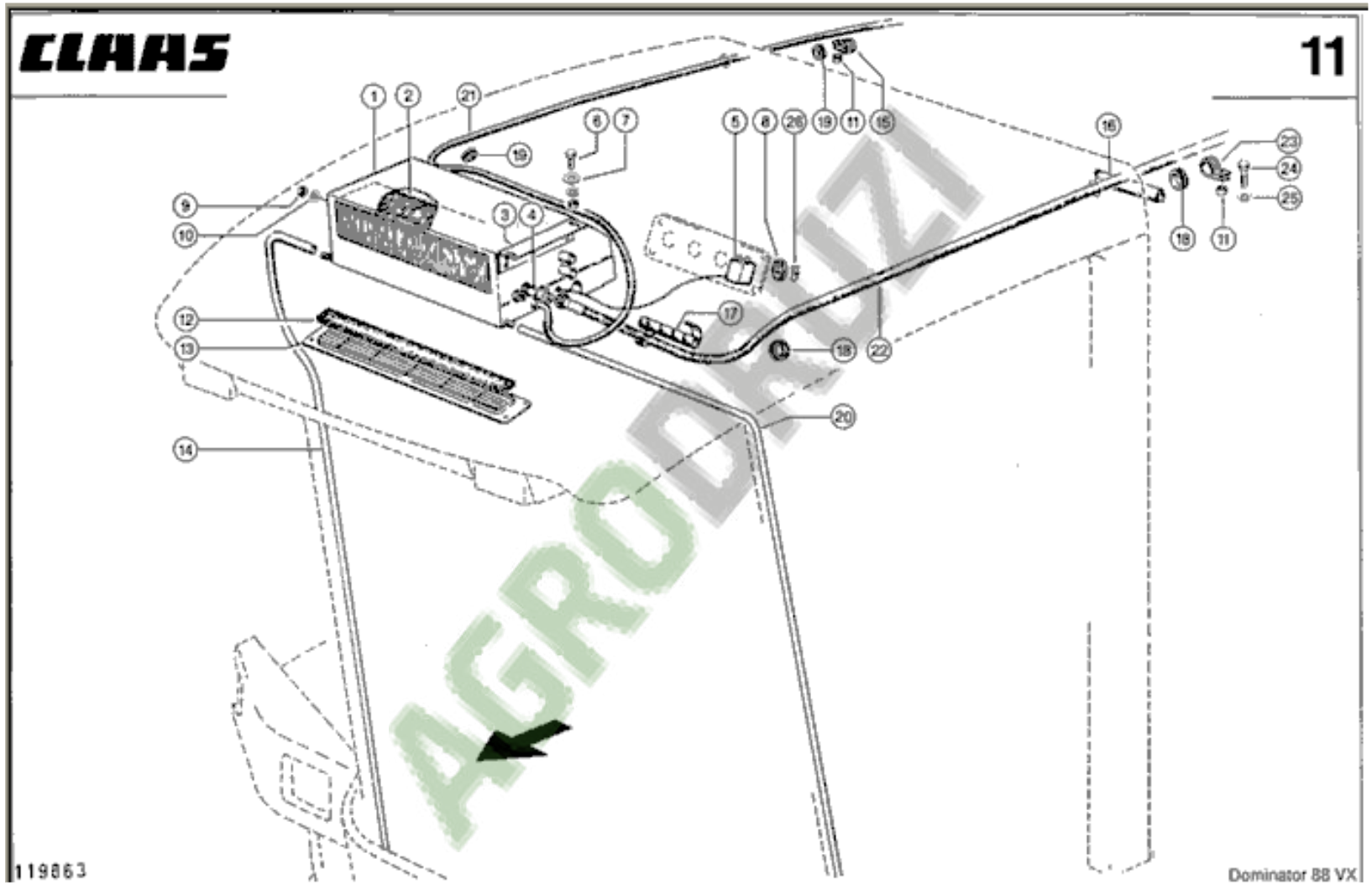
CLAAS
11
1
2
21
19
6
7
5
8
26
19
11
15
16
23
24
25
9
10
3
4
18
11
12
13
17
18
22
20
14
119863
Dominator 88 VX

AGRODRUZI

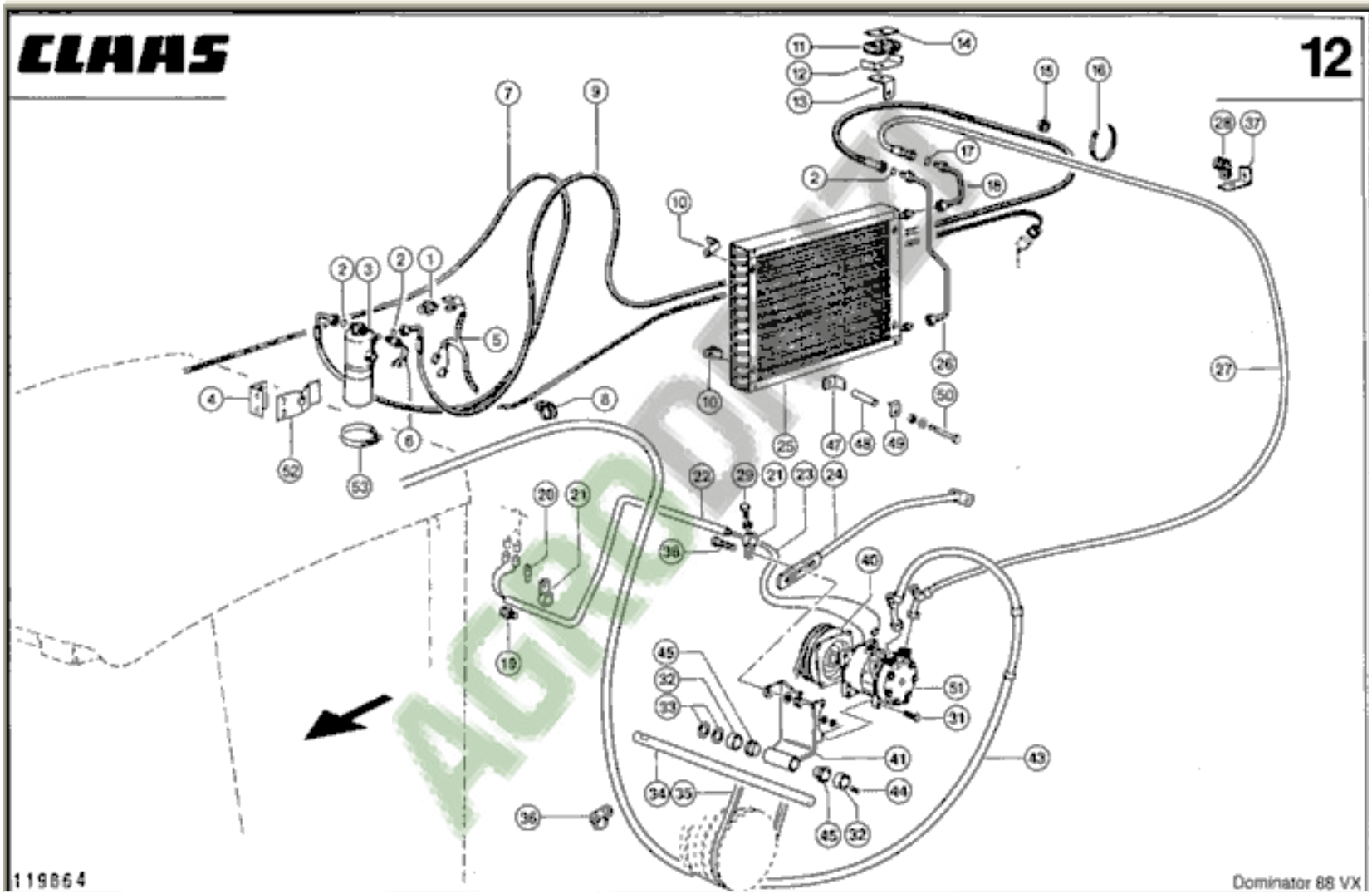
CLAAS
12
119864
Dominator 88 VX

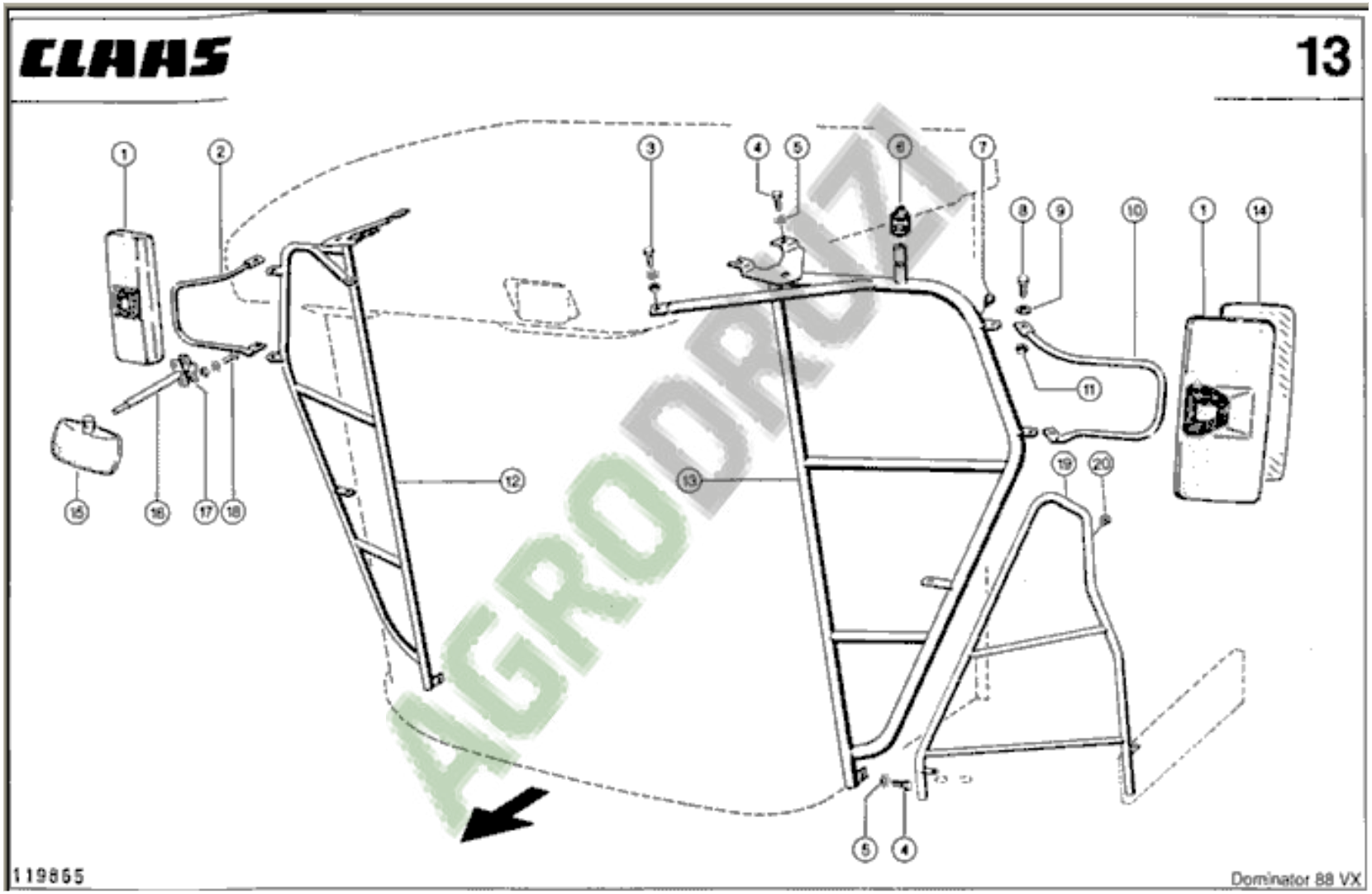
CLAAS
13
119865
Dominator 88 VX

CLAAS

14

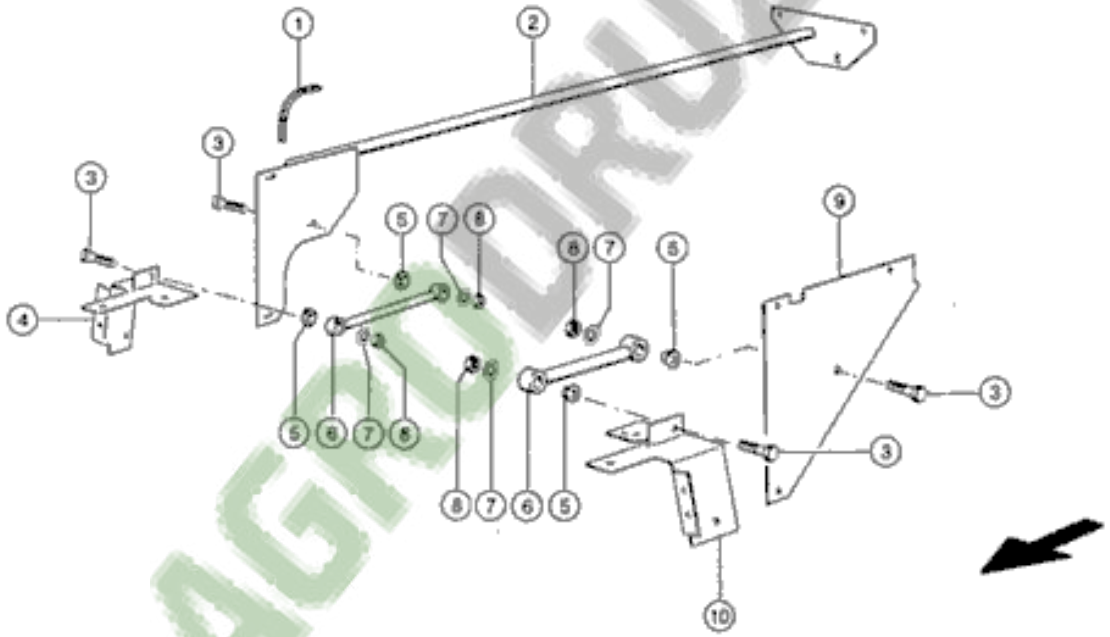


AGRODRUZI

119866

Dominator 88 VX

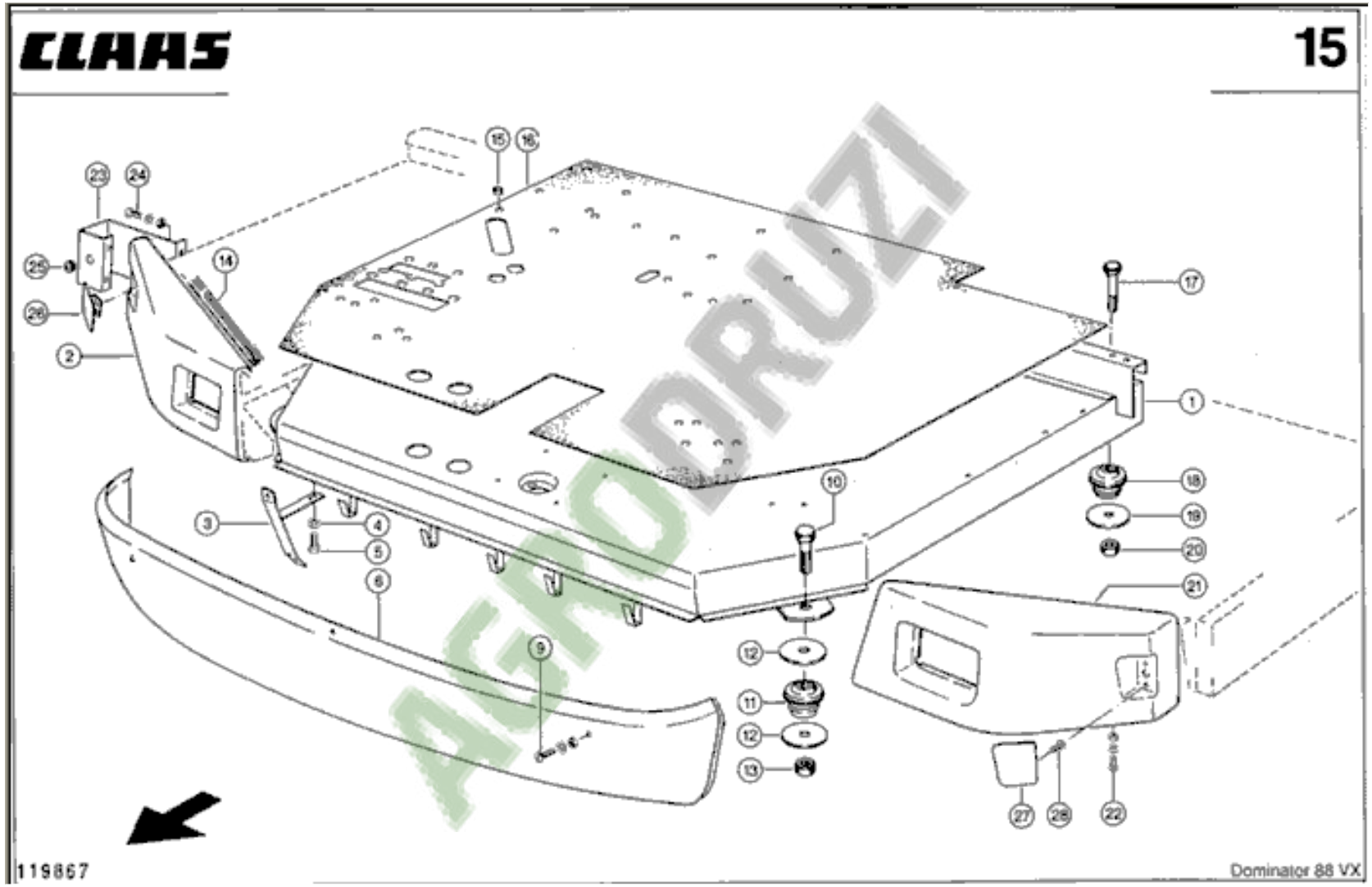
CLAAS
15
119867
Dominator 88 VX
AGRODRUZI

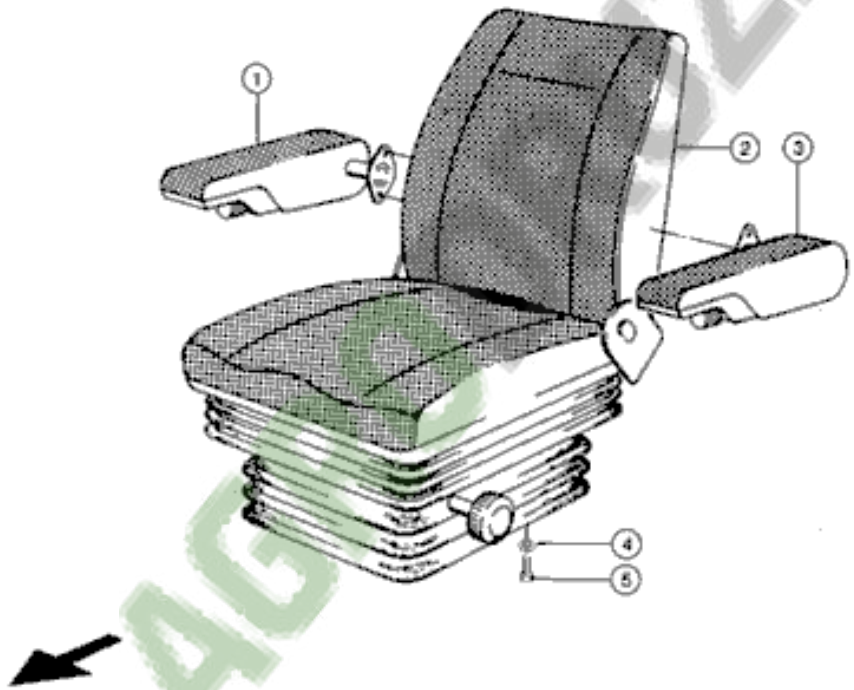
1
2
3
4
5

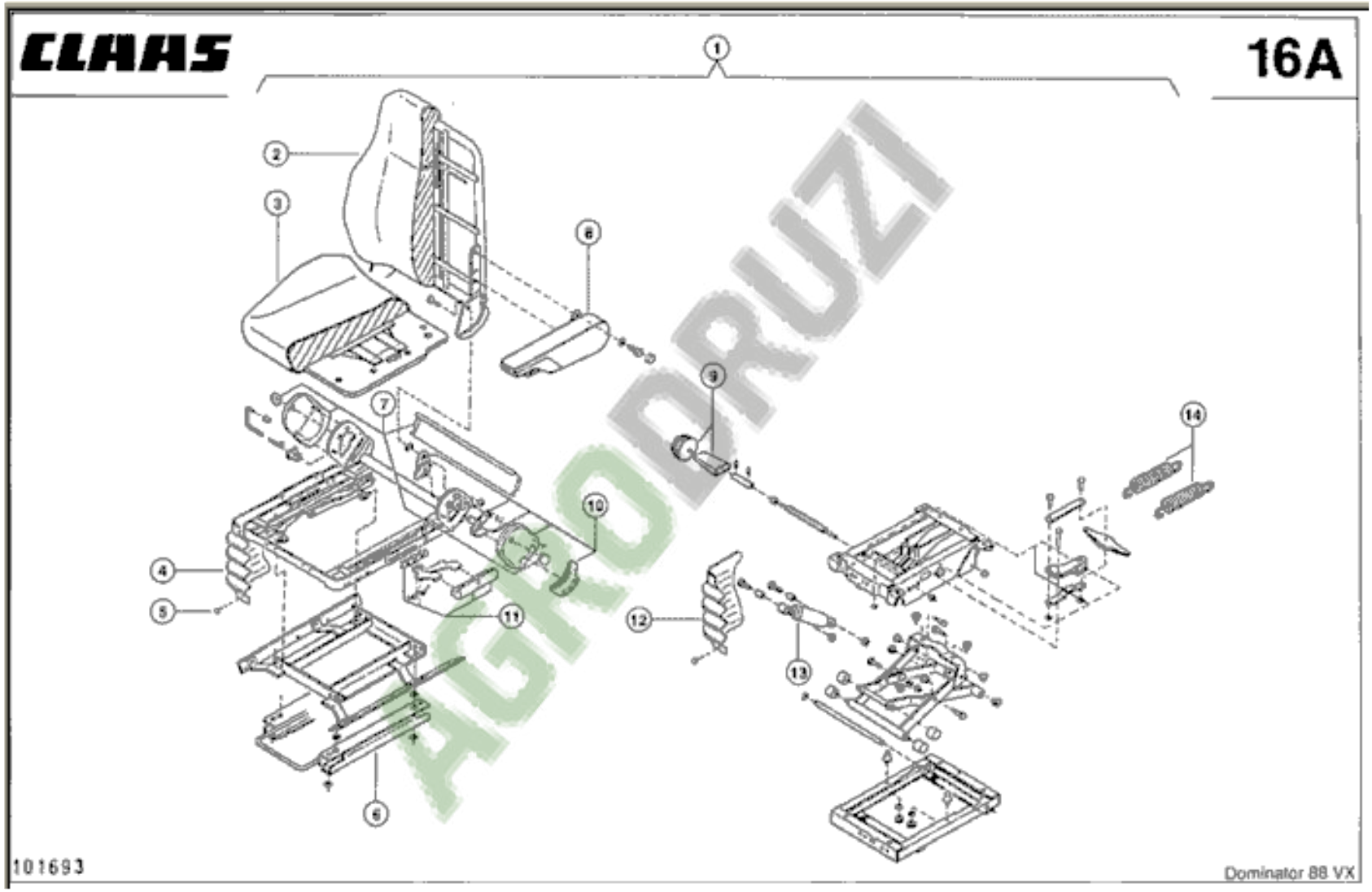


AGRODRUZI

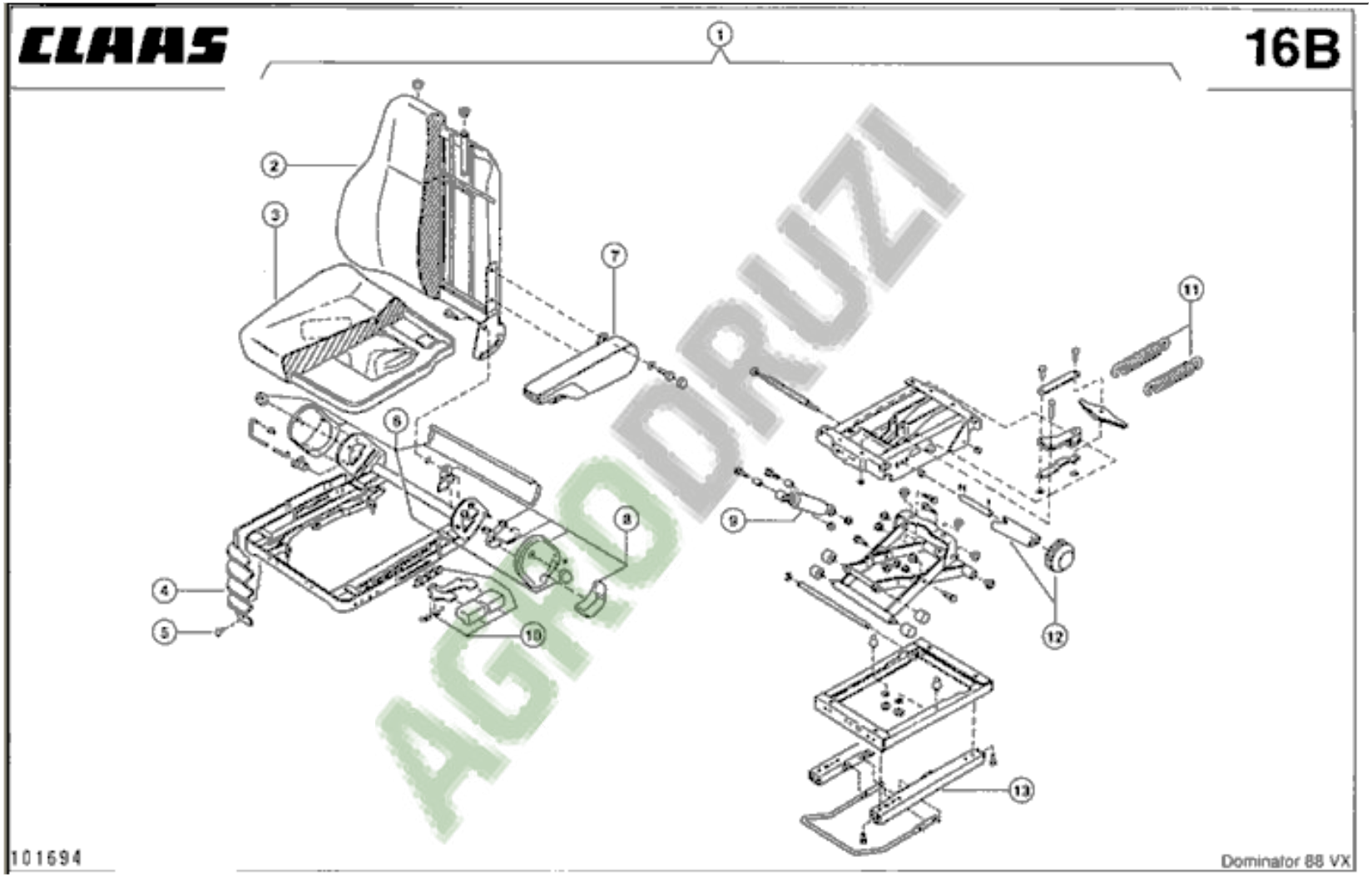

AGRODRUZI

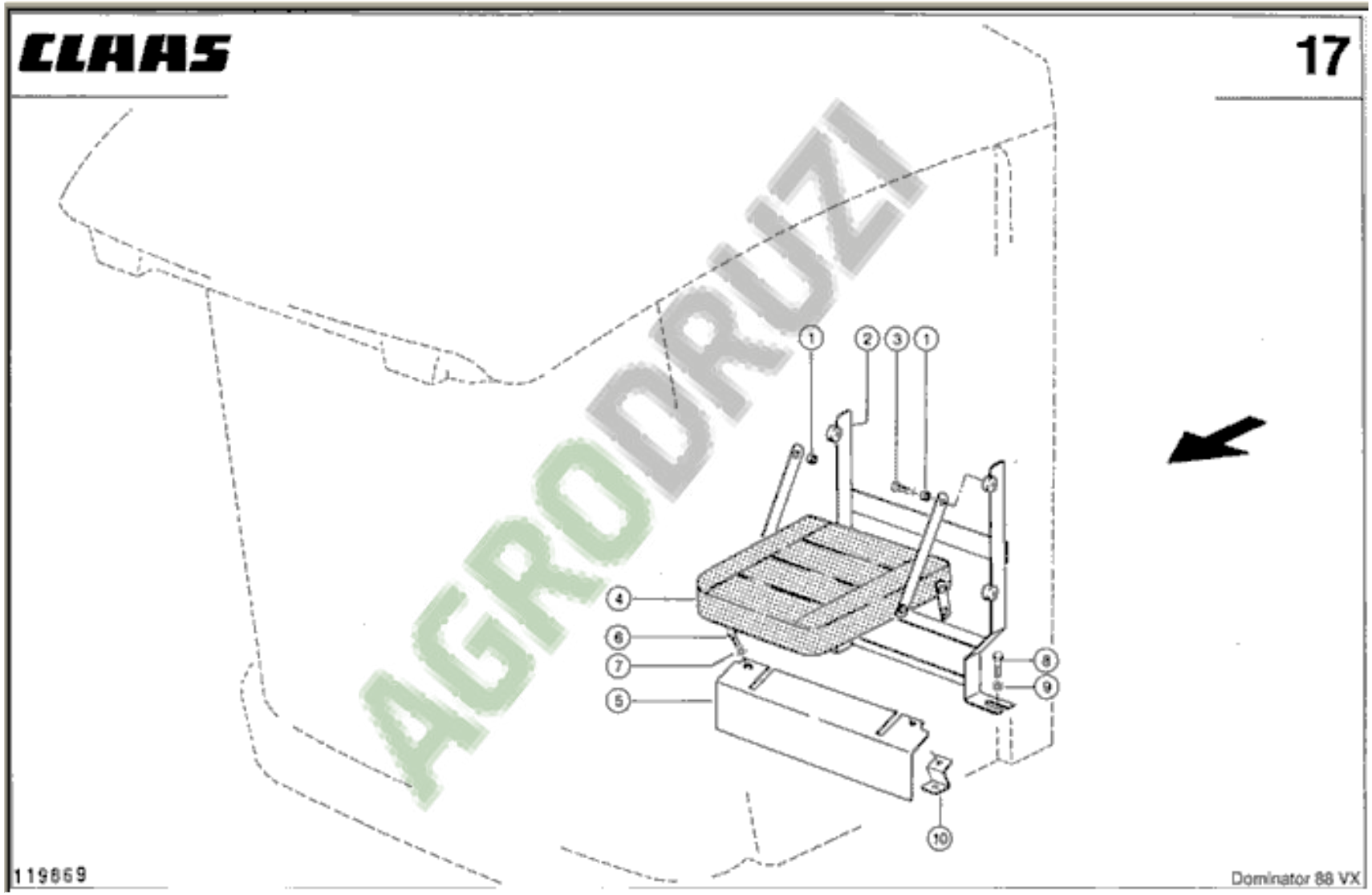


AGRODRUZI

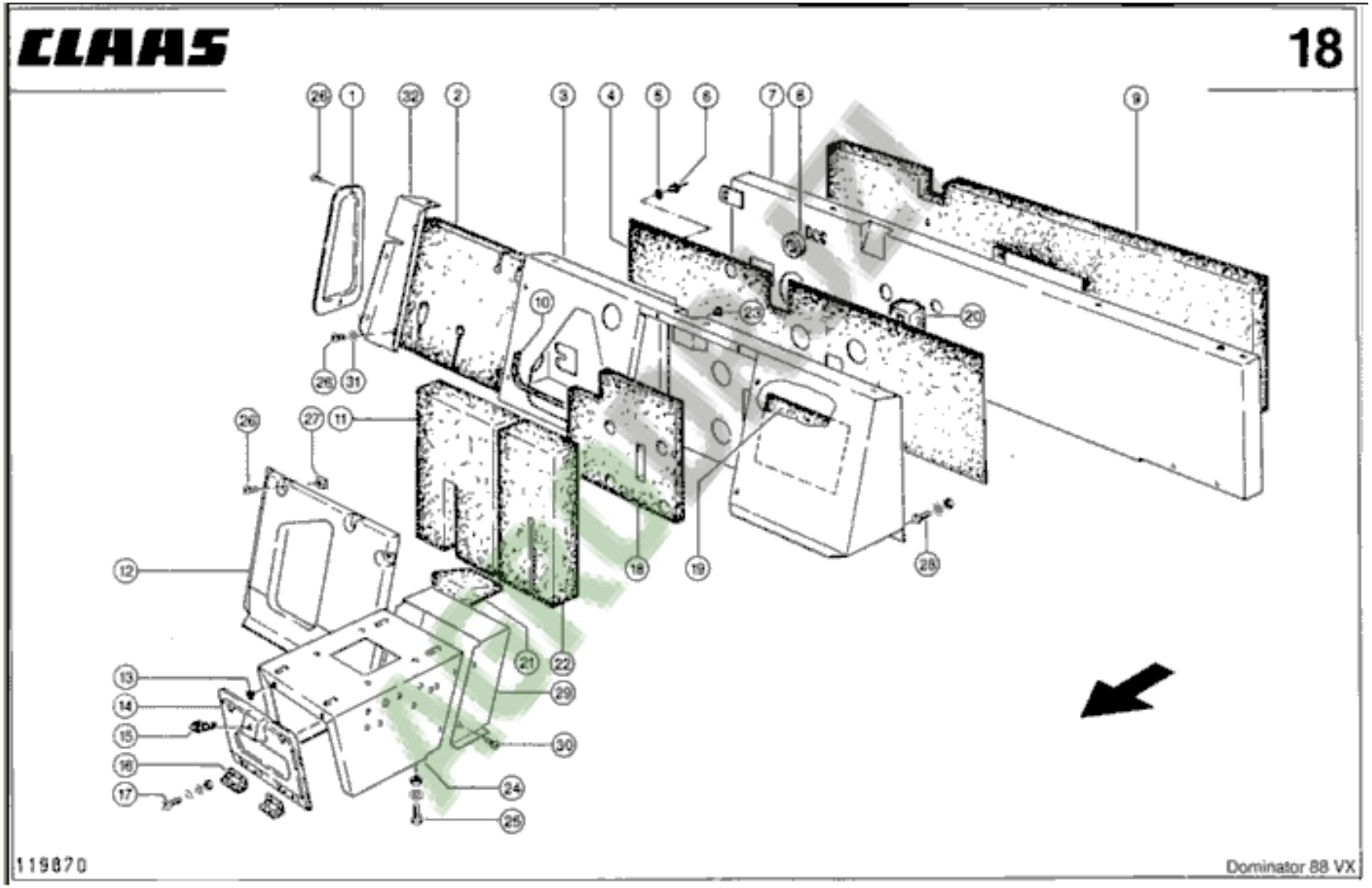
CLAAS
18
119870
Dominator 88 VX

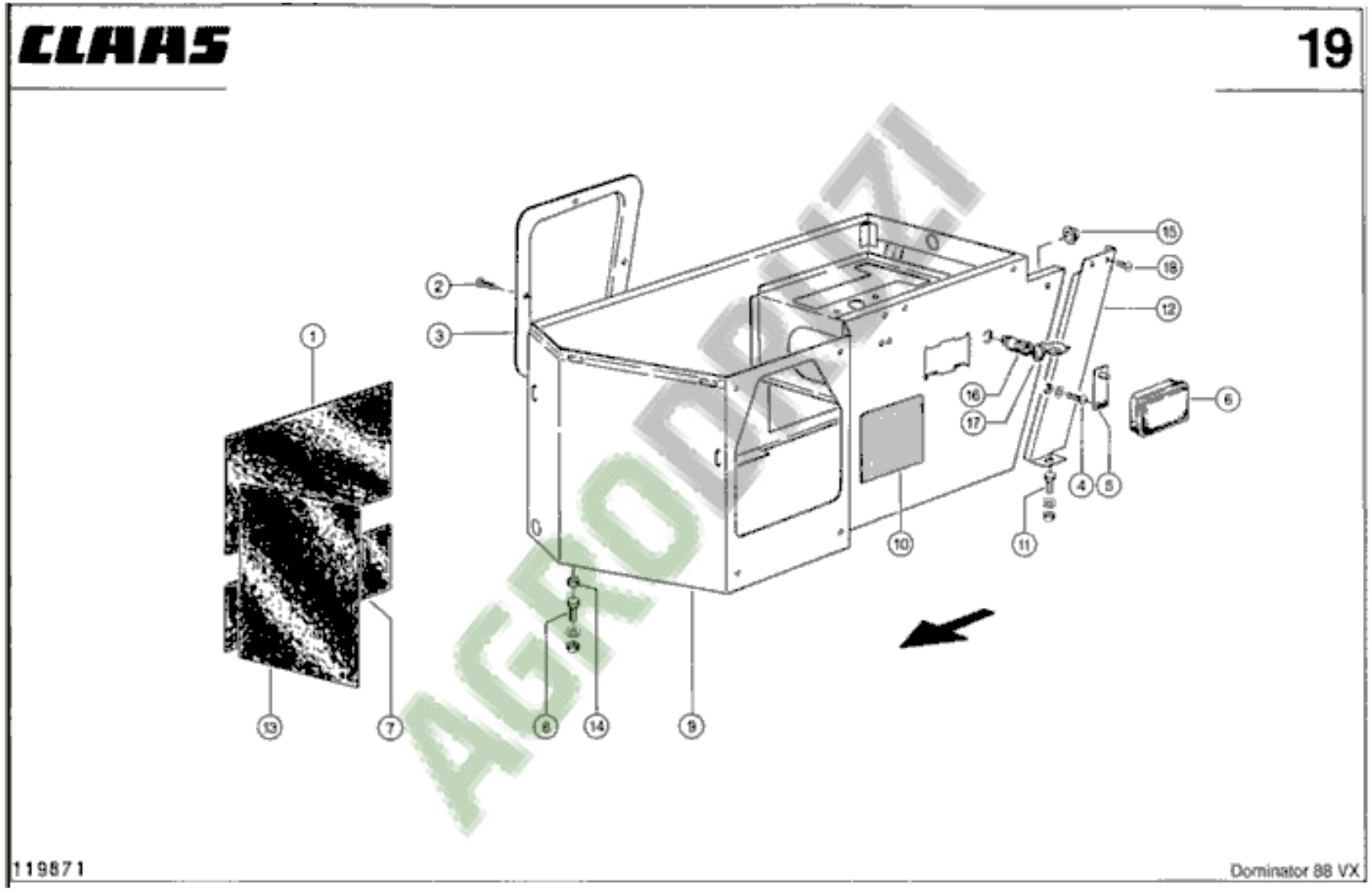
CLAAS
19
1
2
3
4
5
6
7
8
9
10
11
12
13
14
15
16
17
18
119871
Dominator 88 VX

AGRODRUZI

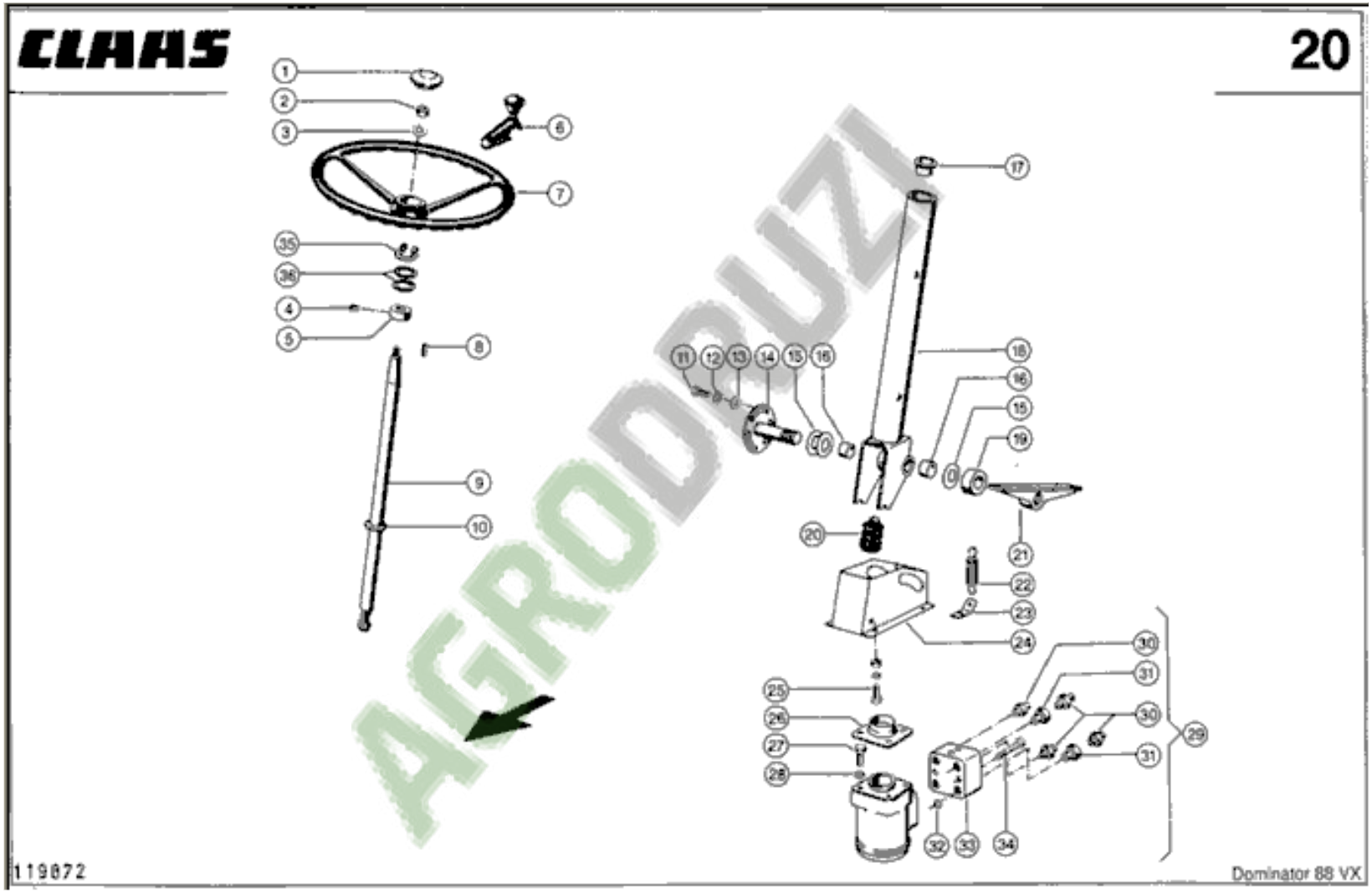
CLAAS
20
1
2
3
6
7
35
36
4
5
8
9
10
11
12
13
14
15
16
17
18
16
15
19
20
21
22
23
24
25
26
27
28
30
31
30
31
29
32
33
34
119072
Dominator 88 VX

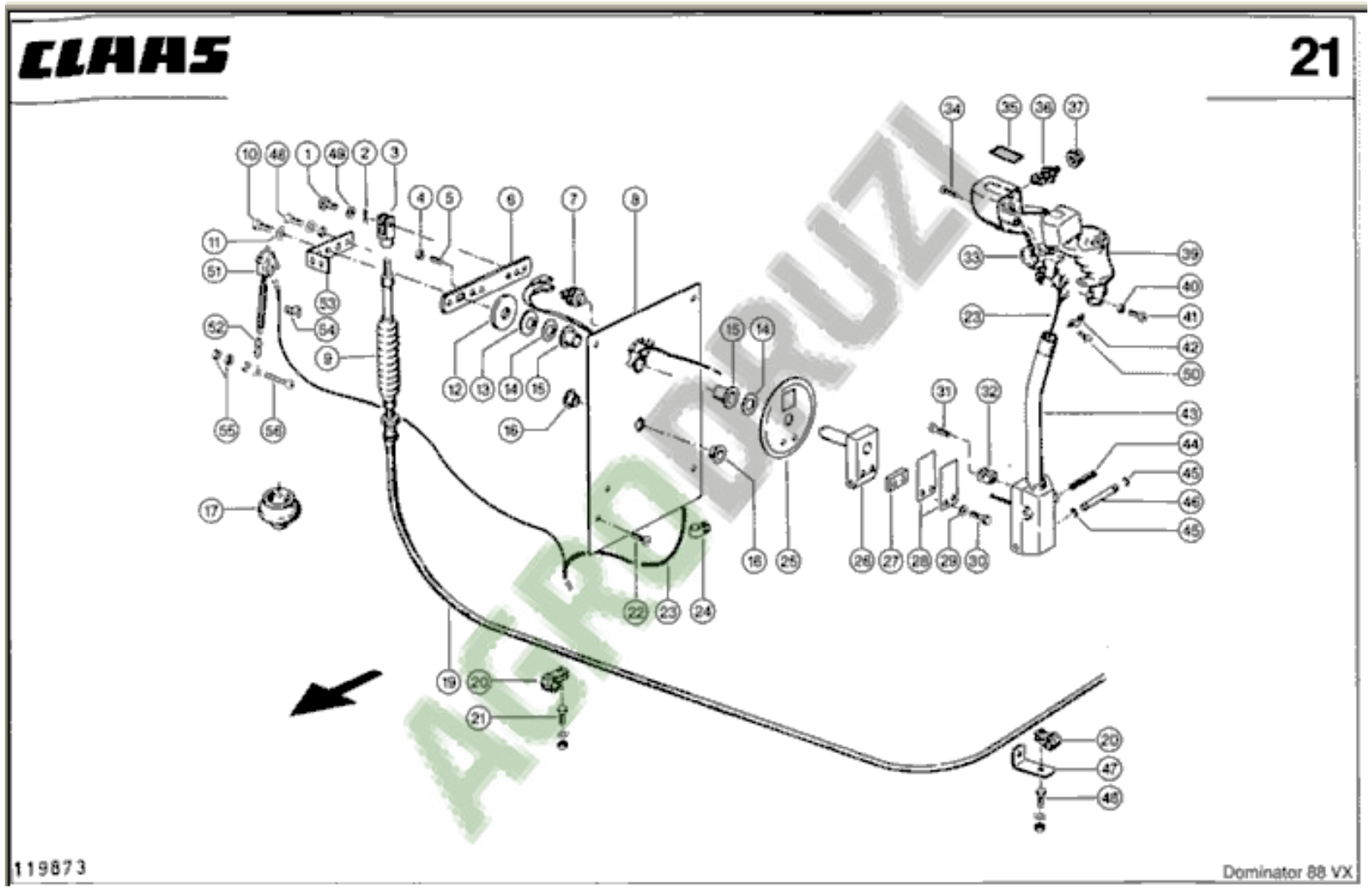
CLAAS
21
119873
Dominator 88 VX

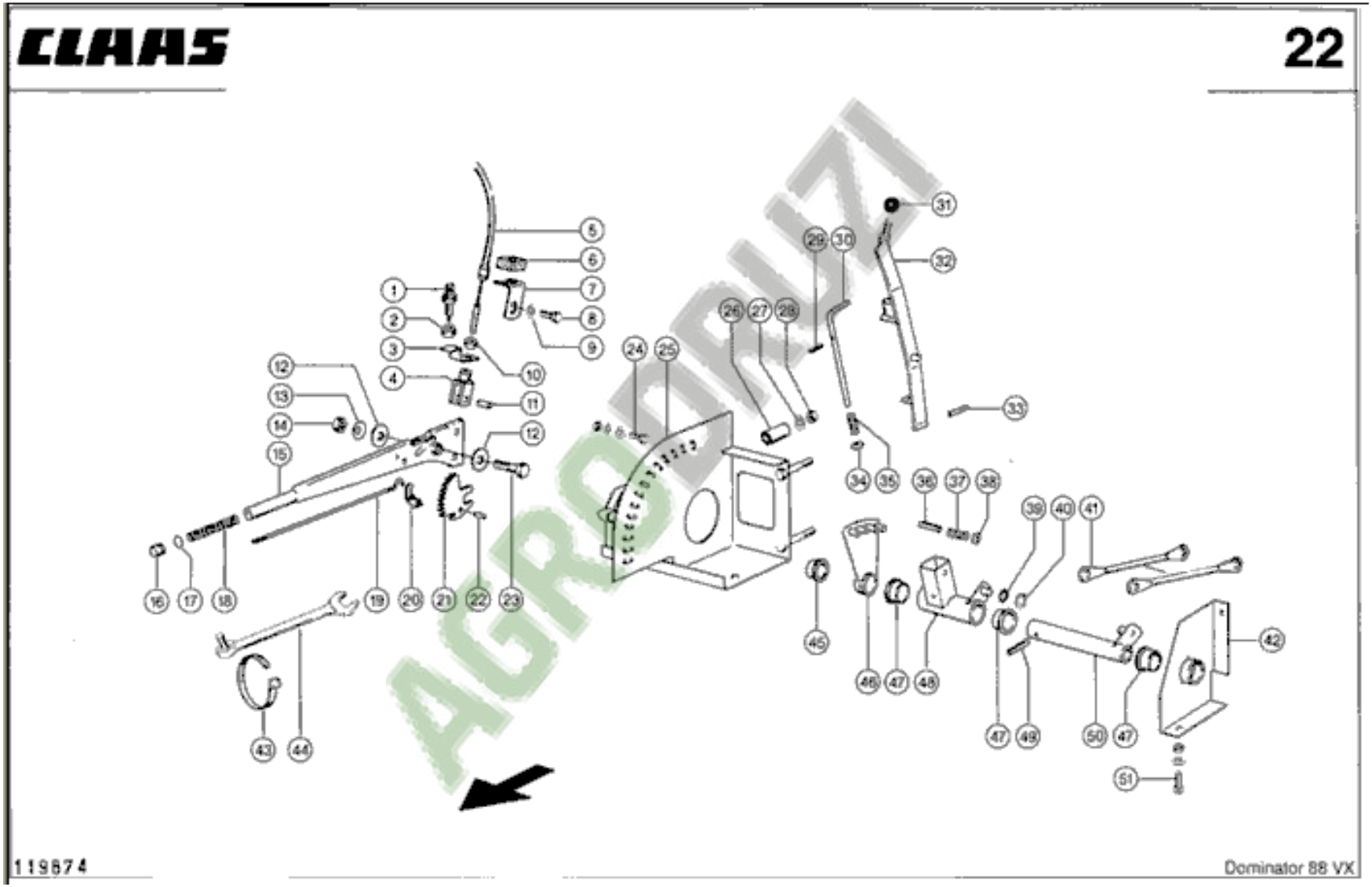


AGRODRUZI

CLAAS

23

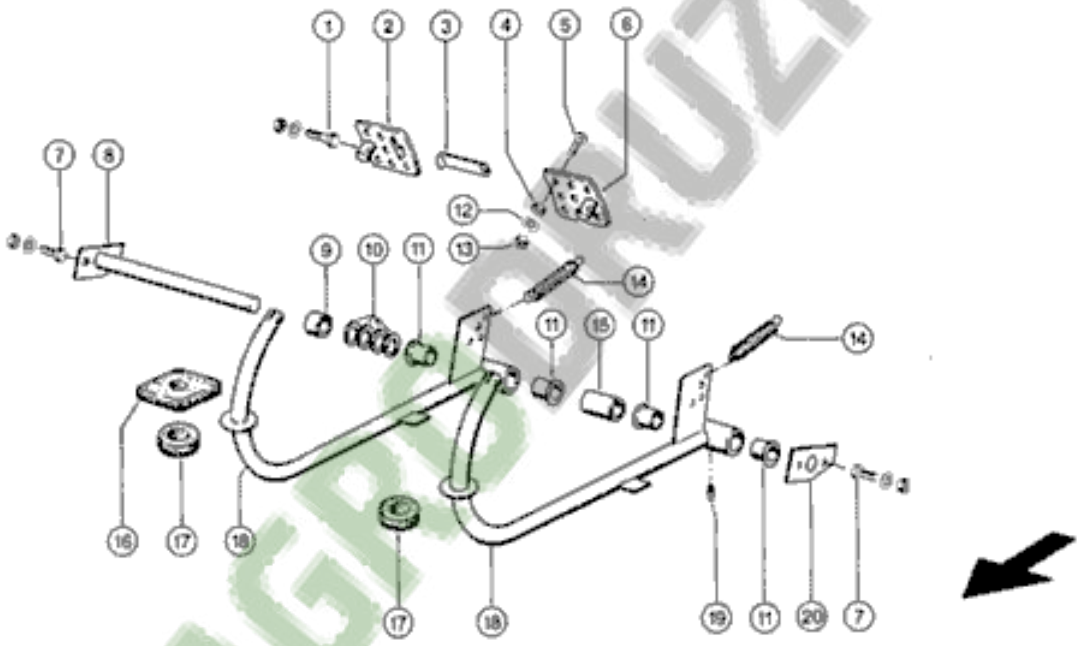


AGRODRUZI

119675

Dominator 88 VX

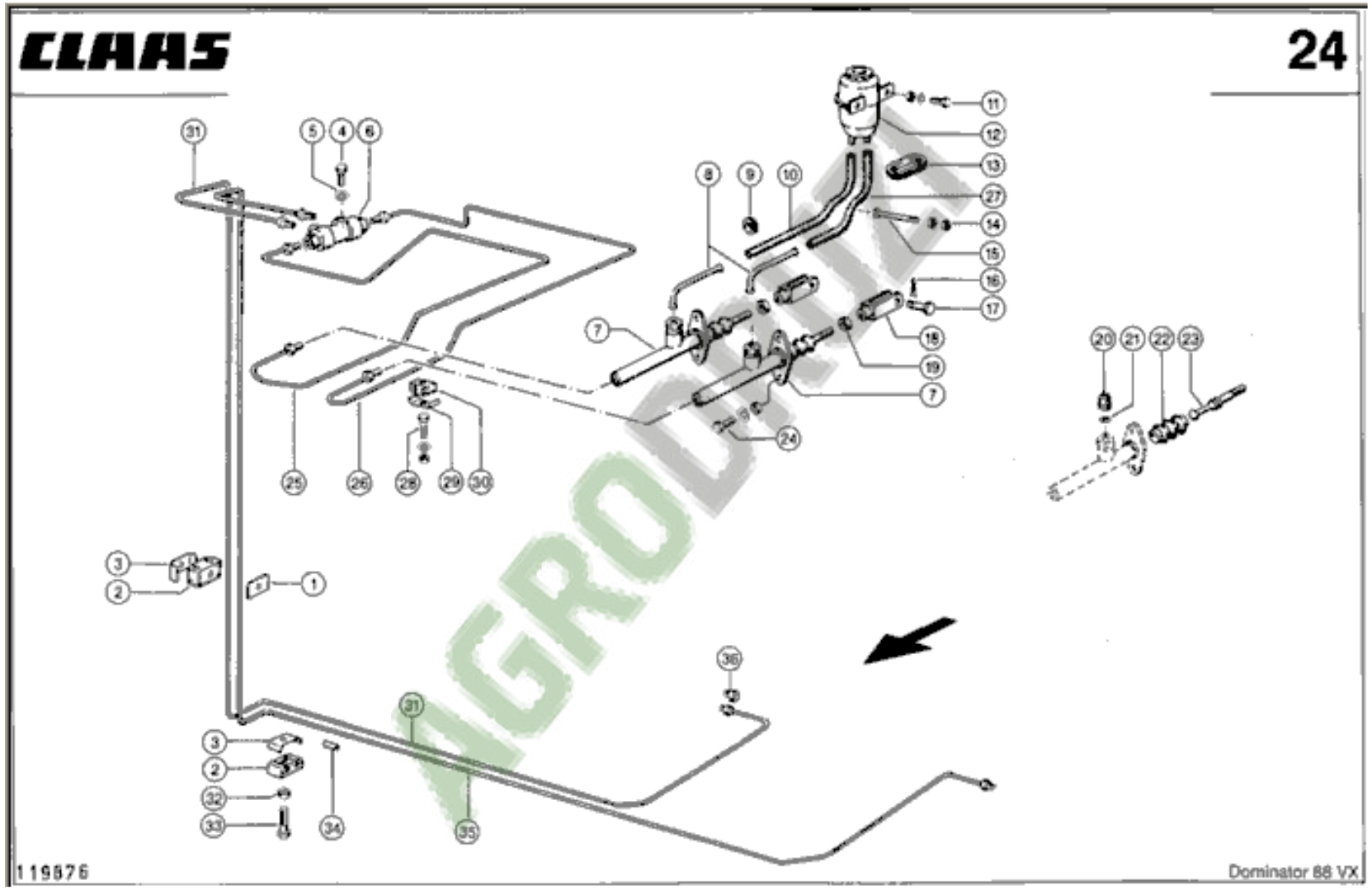
CLAAS
24
119876
Dominator 88 VX

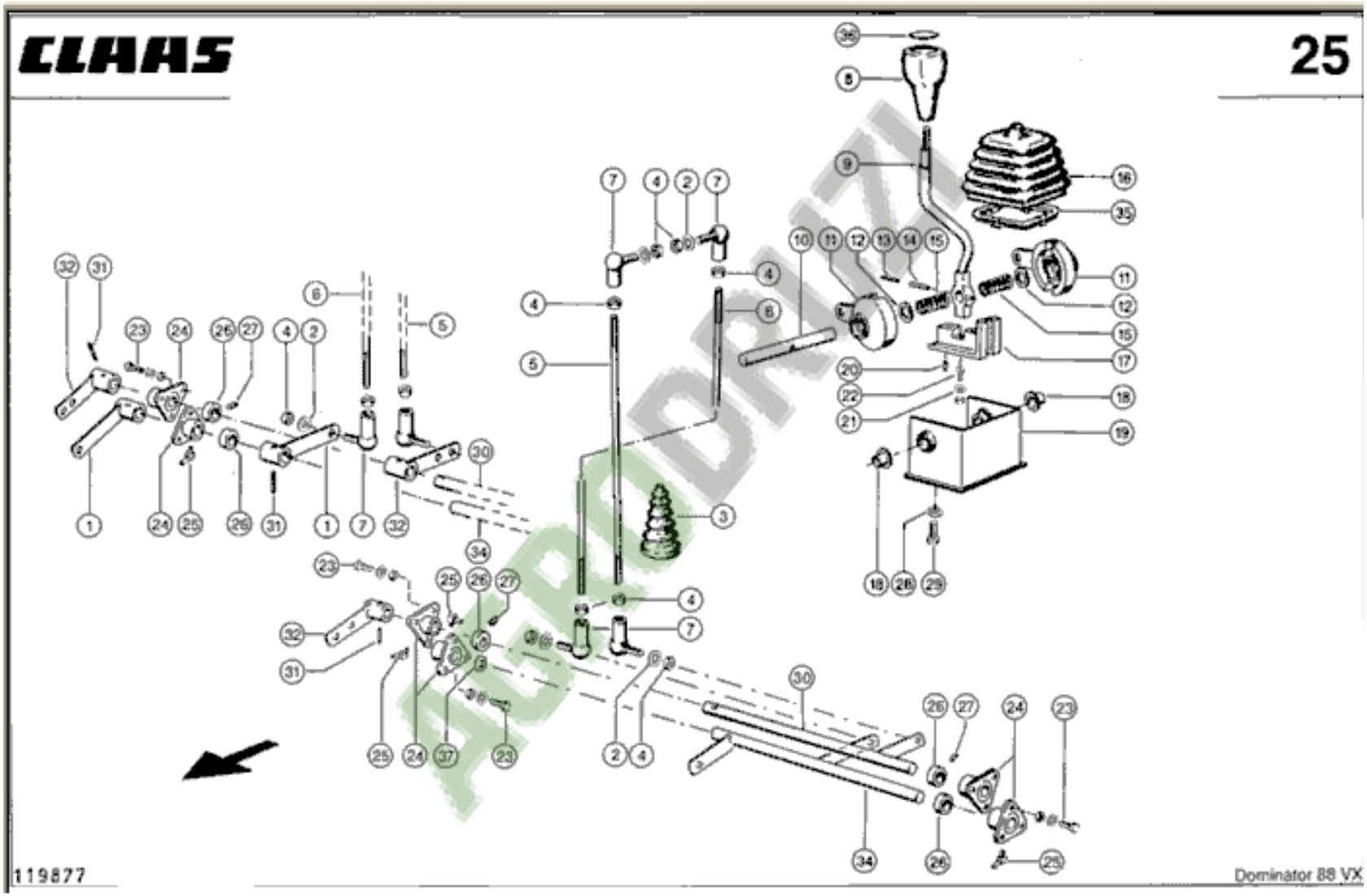
CLAAS
25
119877
Dominator 88 VX

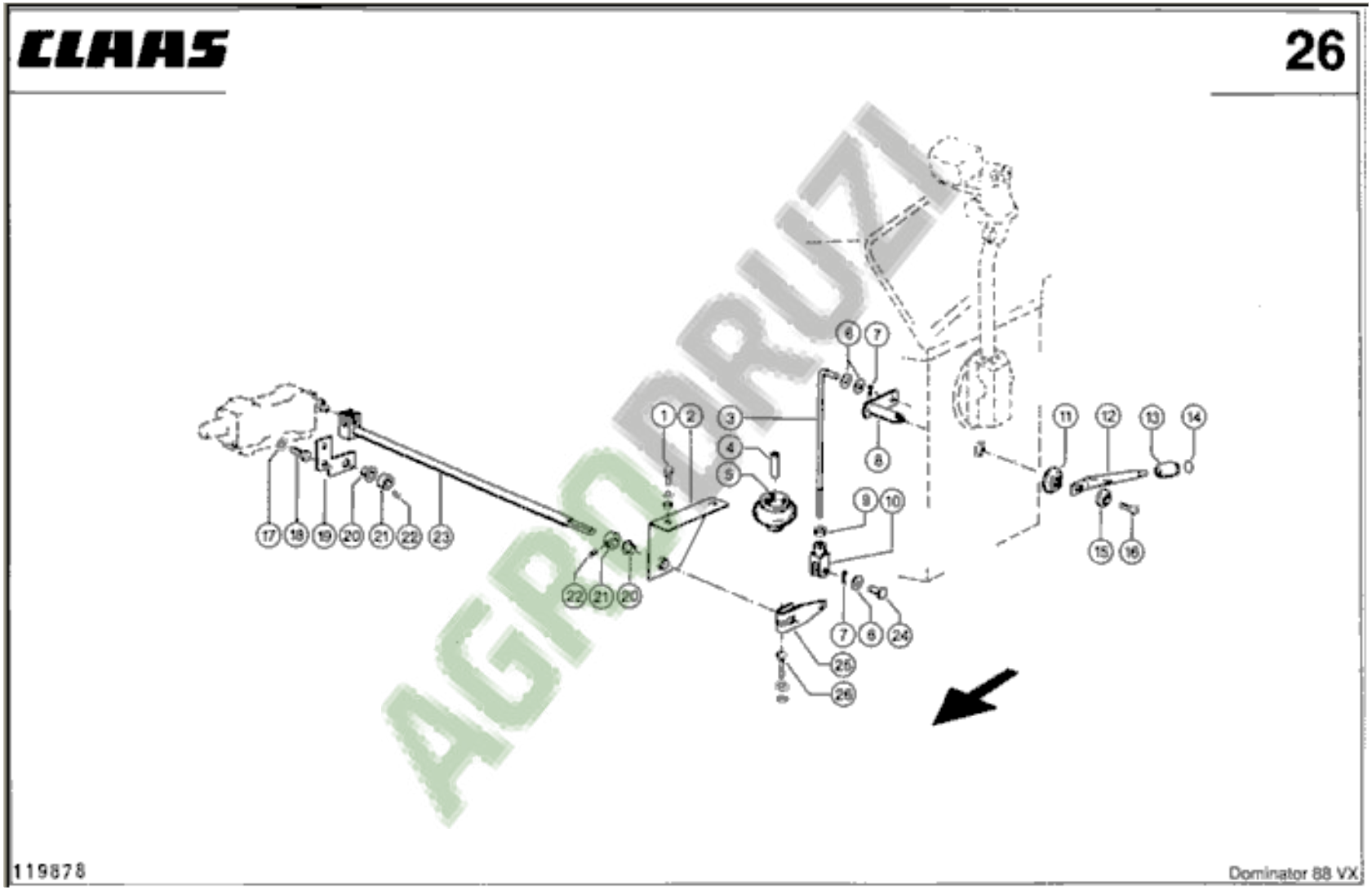
CLAAS
26
1
2
3
4
5
6
7
8
9
10
11
12
13
14
15
16
17
18
19
20
21
22
23
24
25
26
119878
Dominator 88 VX

AGROPRUZI

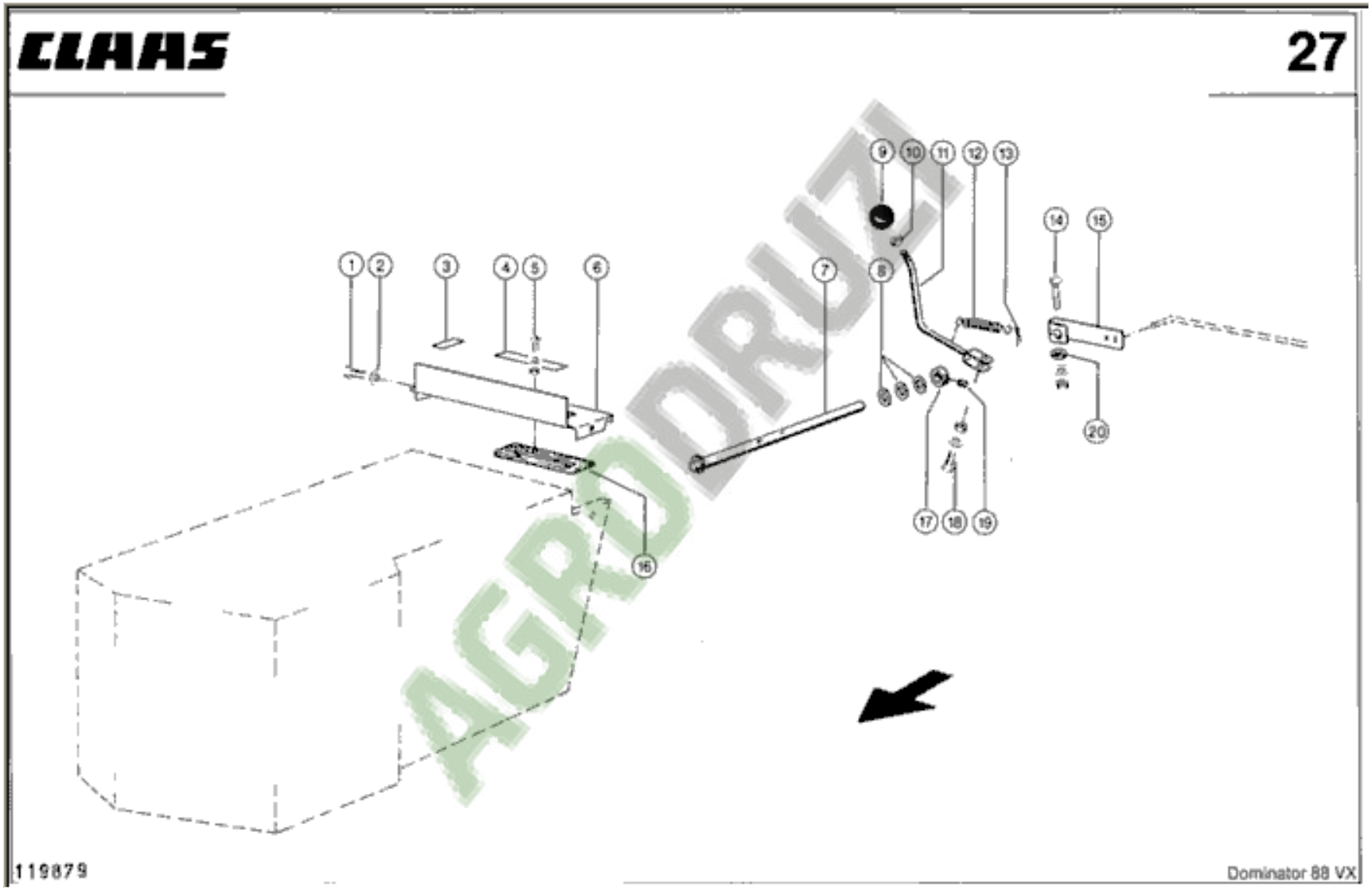
CLAAS
27
1
2
3
4
5
6
7
8
9
10
11
12
13
14
15
16
17
18
19
20
119879
Dominator 88 VX

AGRODRUZI

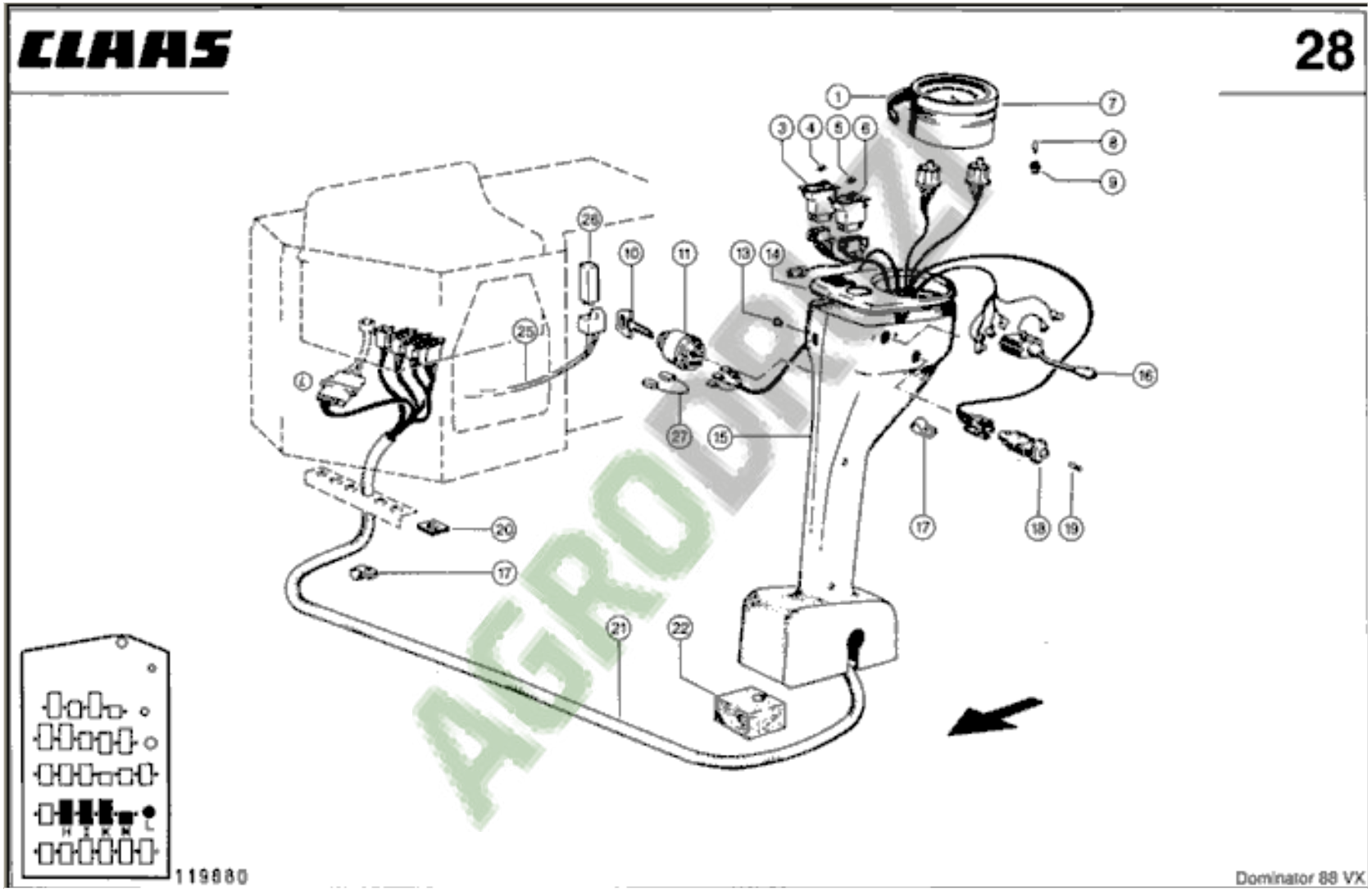
CLAAS
28
1
2
3
4
5
6
7
8
9
10
11
13
14
15
16
17
18
19
20
21
22
25
26
27
H I K N L
119880
Dominator 88 VX

CLAAS

29

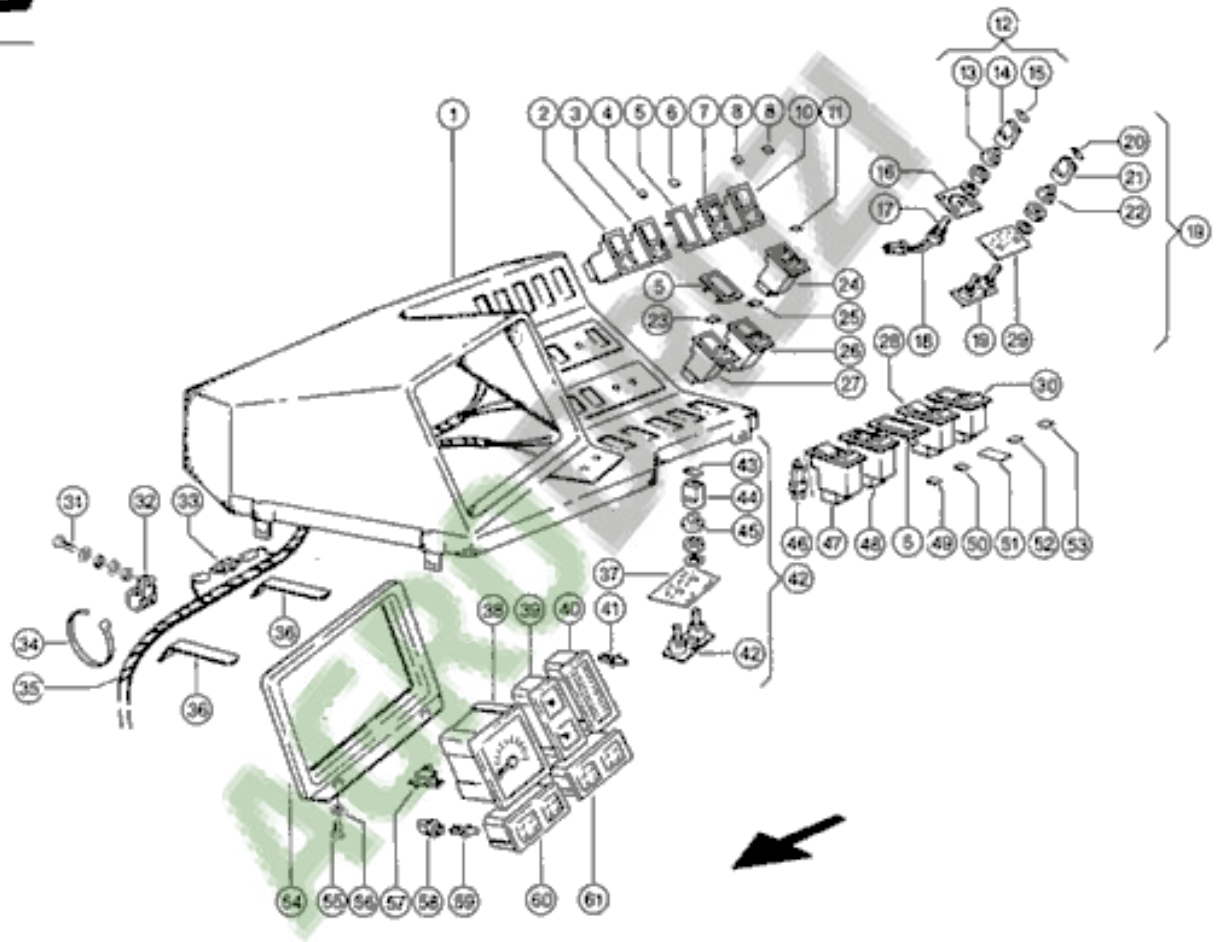

119661

Dominator 88 VX

CLAAS

30

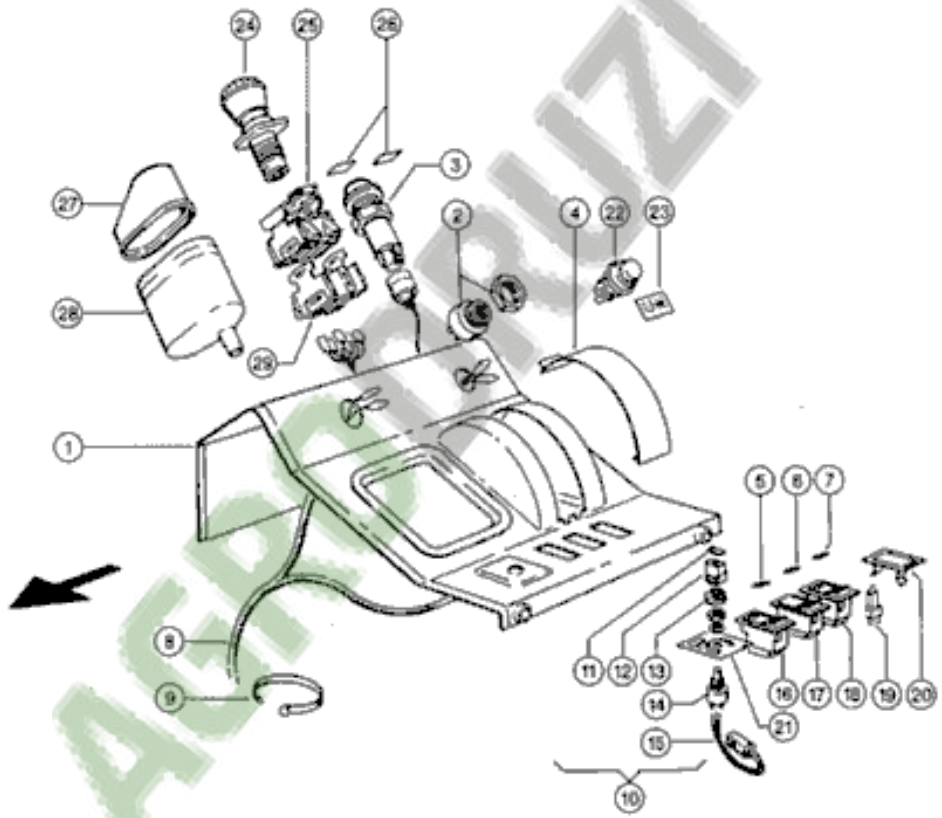


AGRICRUZI

119882

Dominator 88 VX

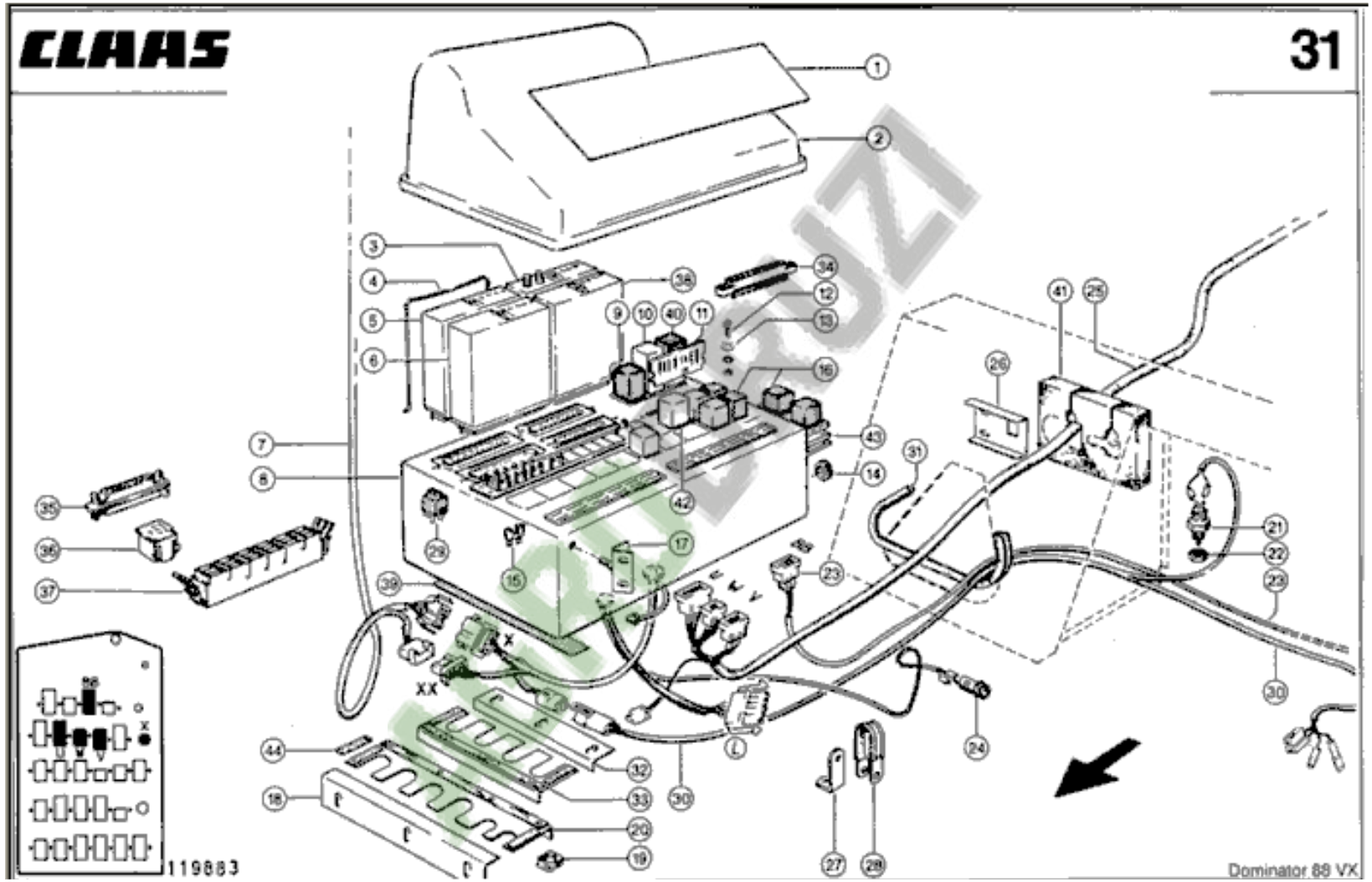
CLAAS
31
119883
Dominator 88 VX

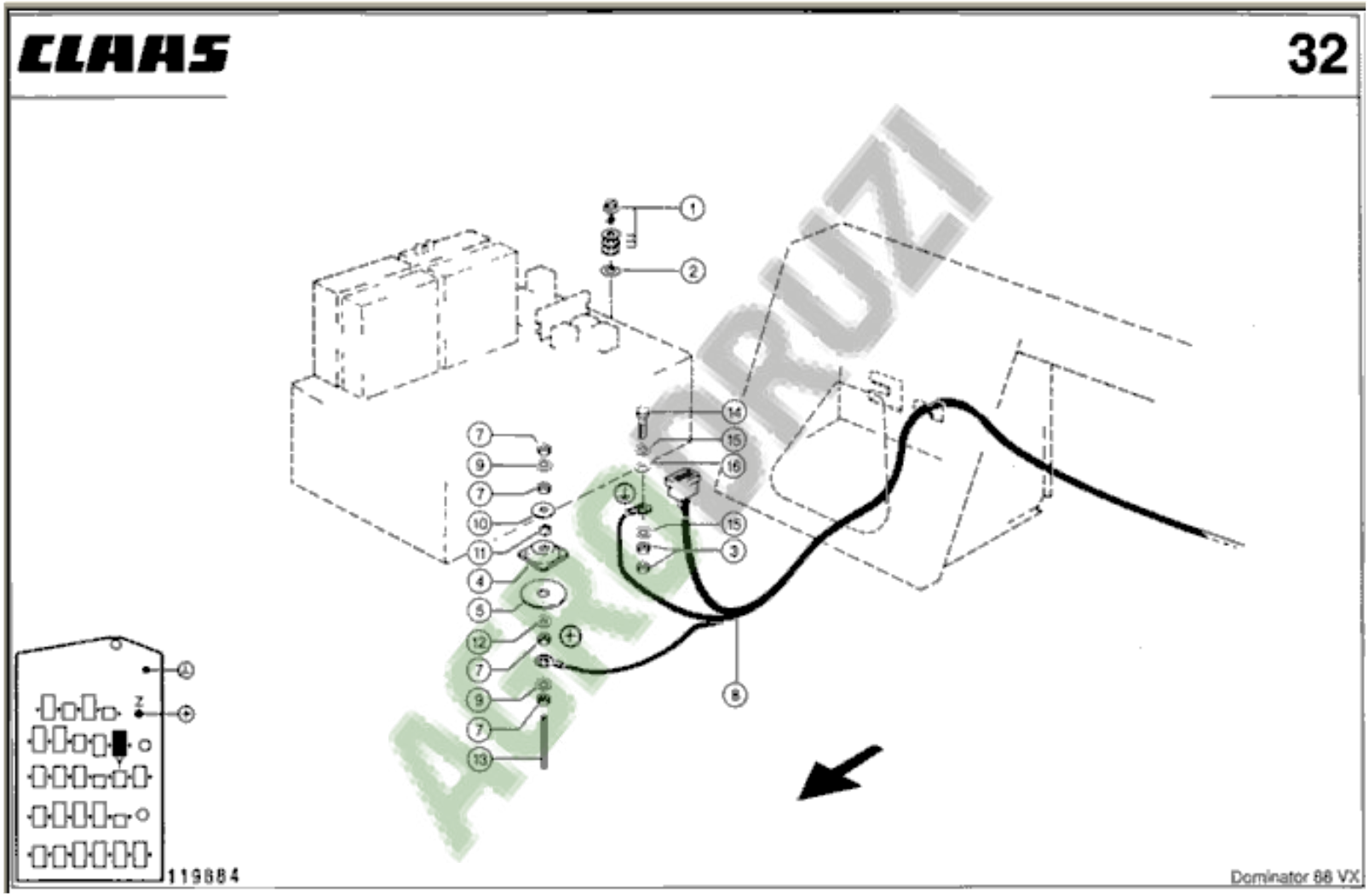
CLAAS
32
1
2
7
9
7
10
11
4
5
12
7
9
7
13
14
15
16
15
3
8
119884
Dominator 88 VX

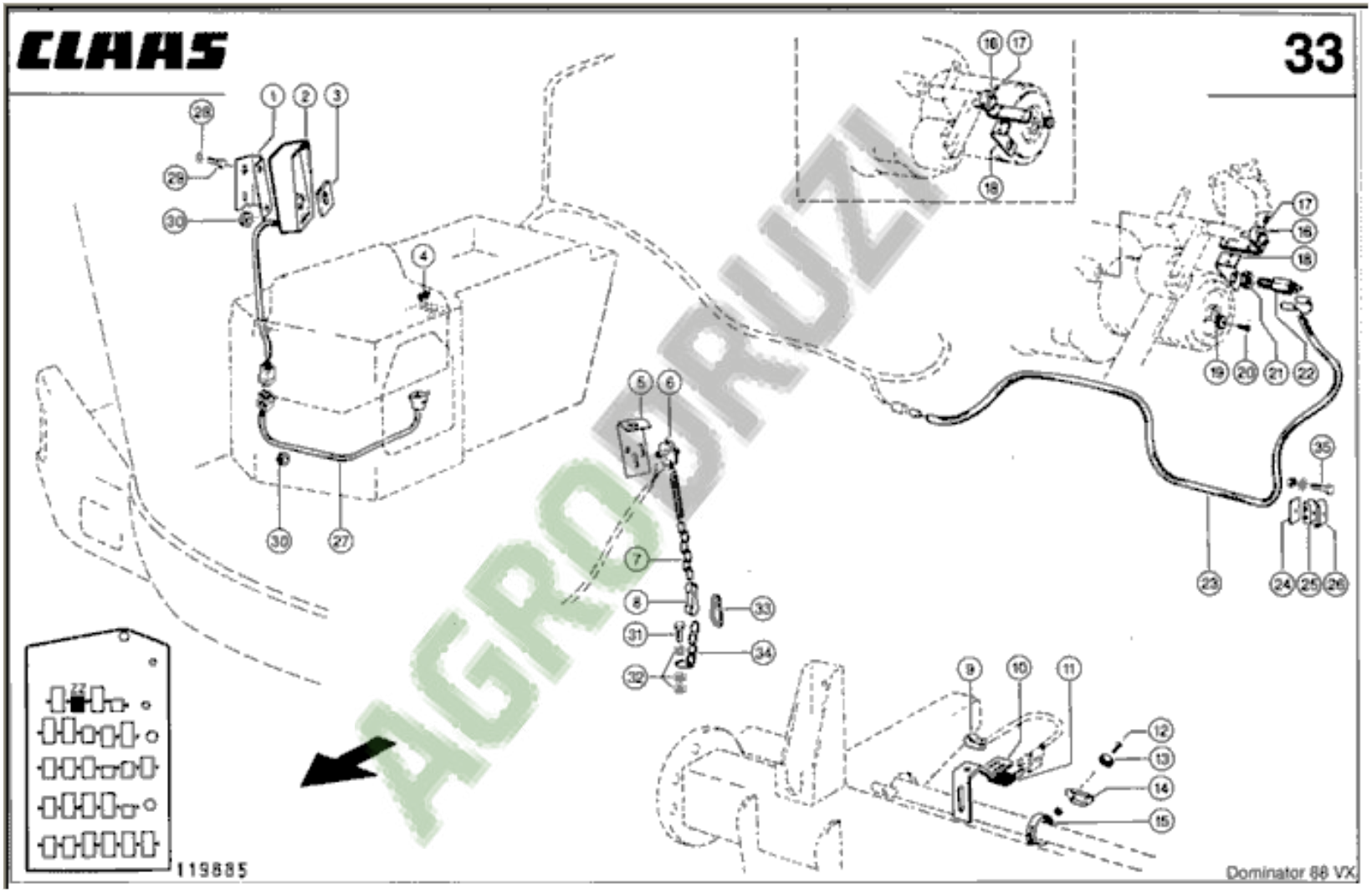
CLAAS
33
119885
Dominator 88 VX

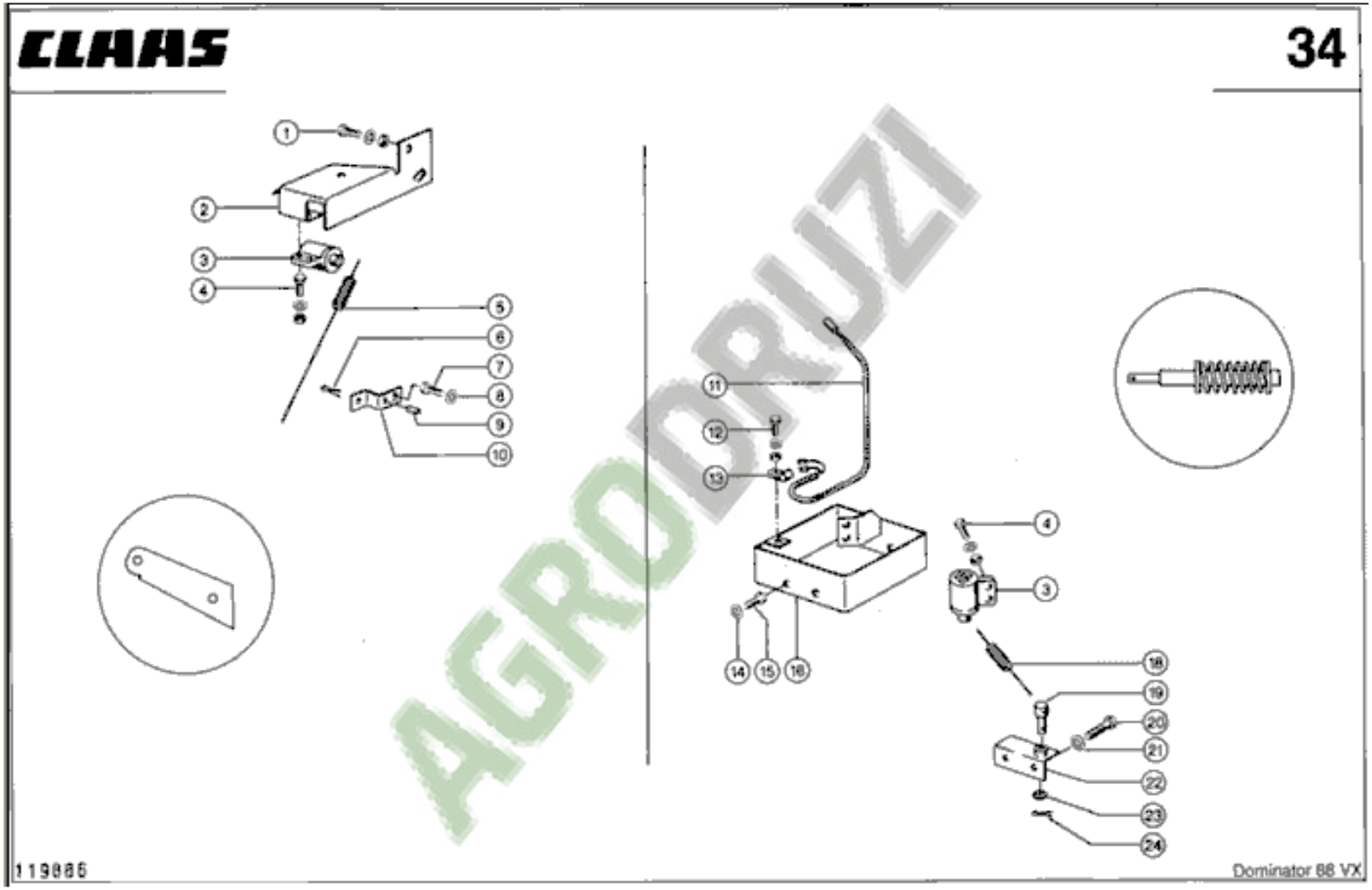
CLAAS
34
1
2
3
4
5
6
7
8
9
10
11
12
13
14
15
16
4
3
18
19
20
21
22
23
24
119886
Dominator 88 VX

AGRODRUZI

CLAAS

35

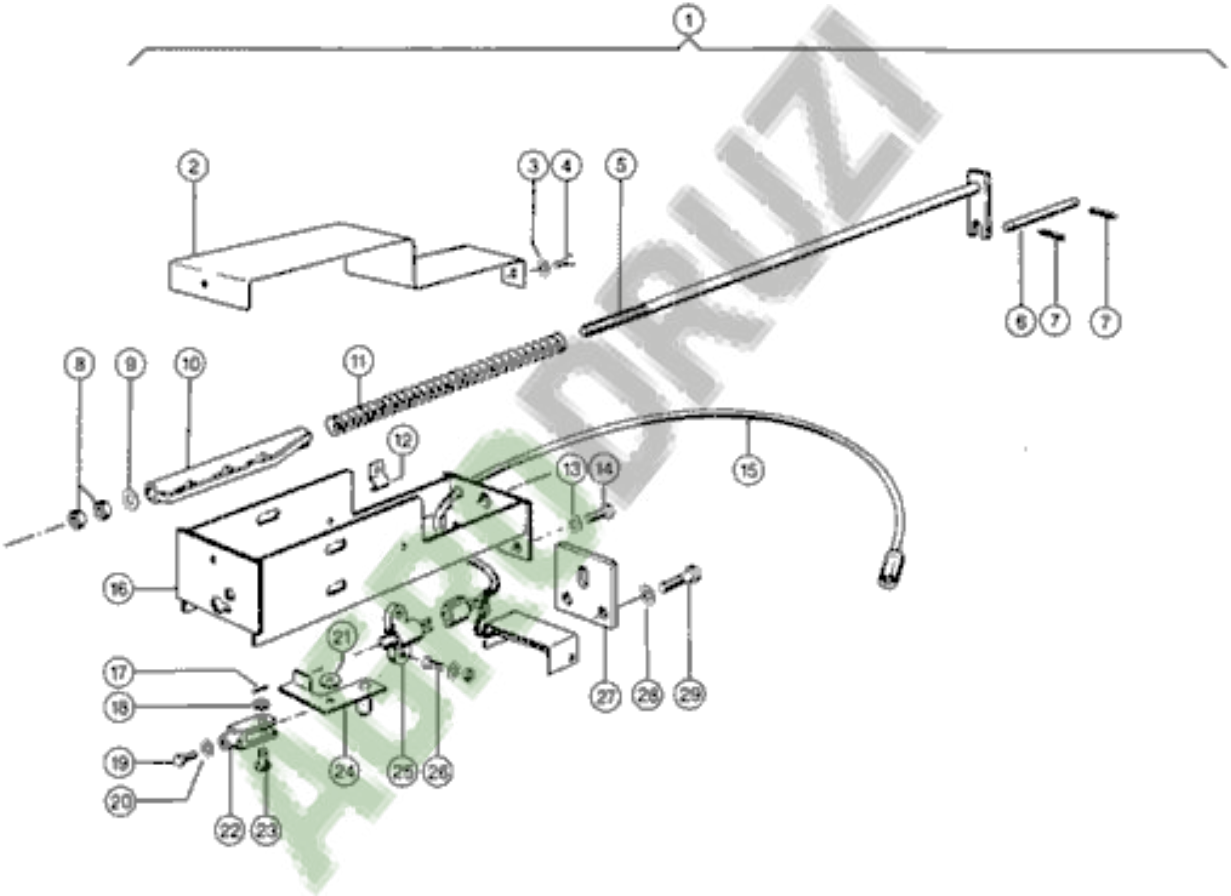


119687

Dominator 88 VX

AGRODRUZI

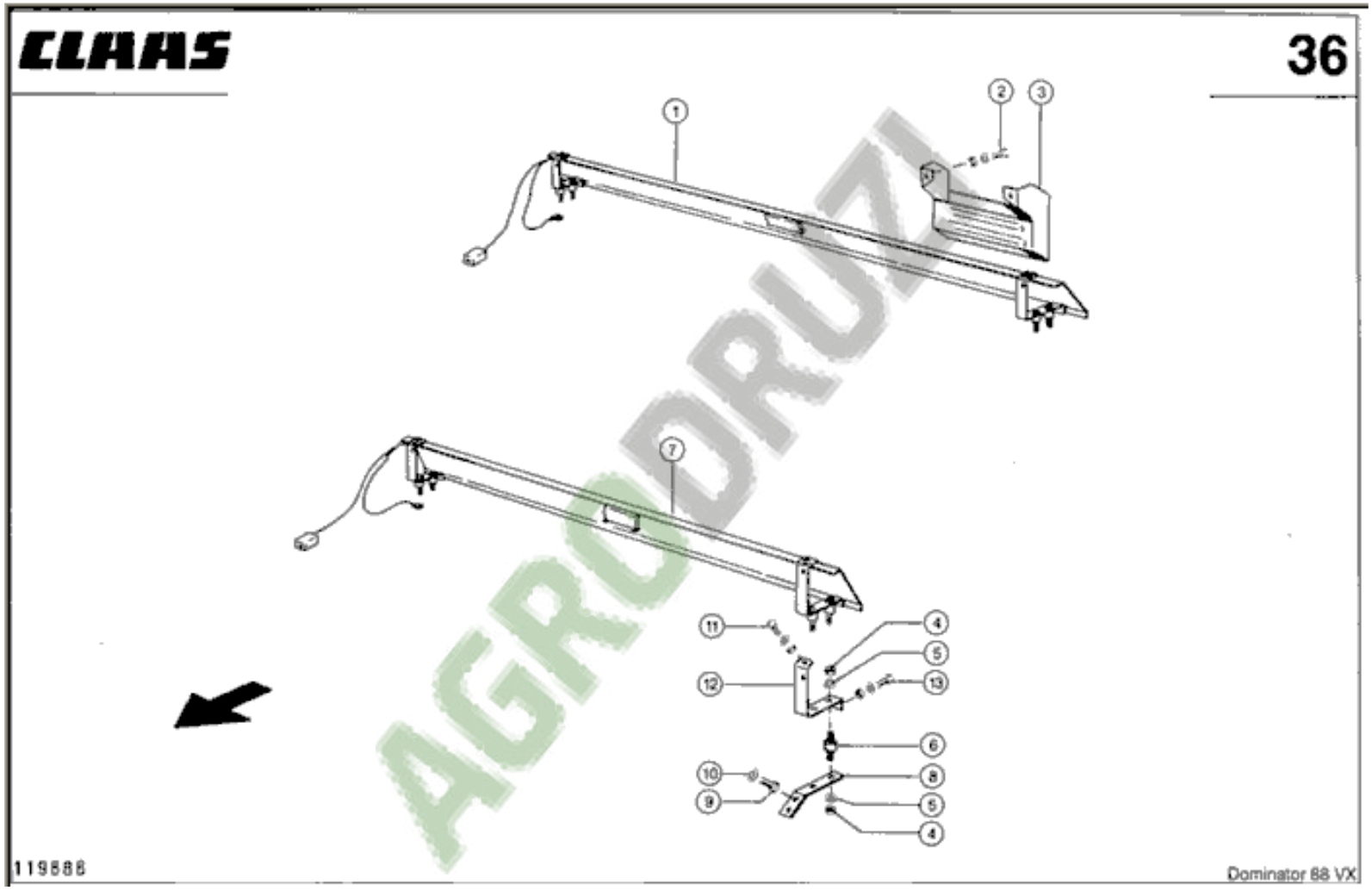
CLAAS
36
1
2
3
7
11
12
10
9
4
5
13
6
8
5
4
119888
Dominator 88 VX

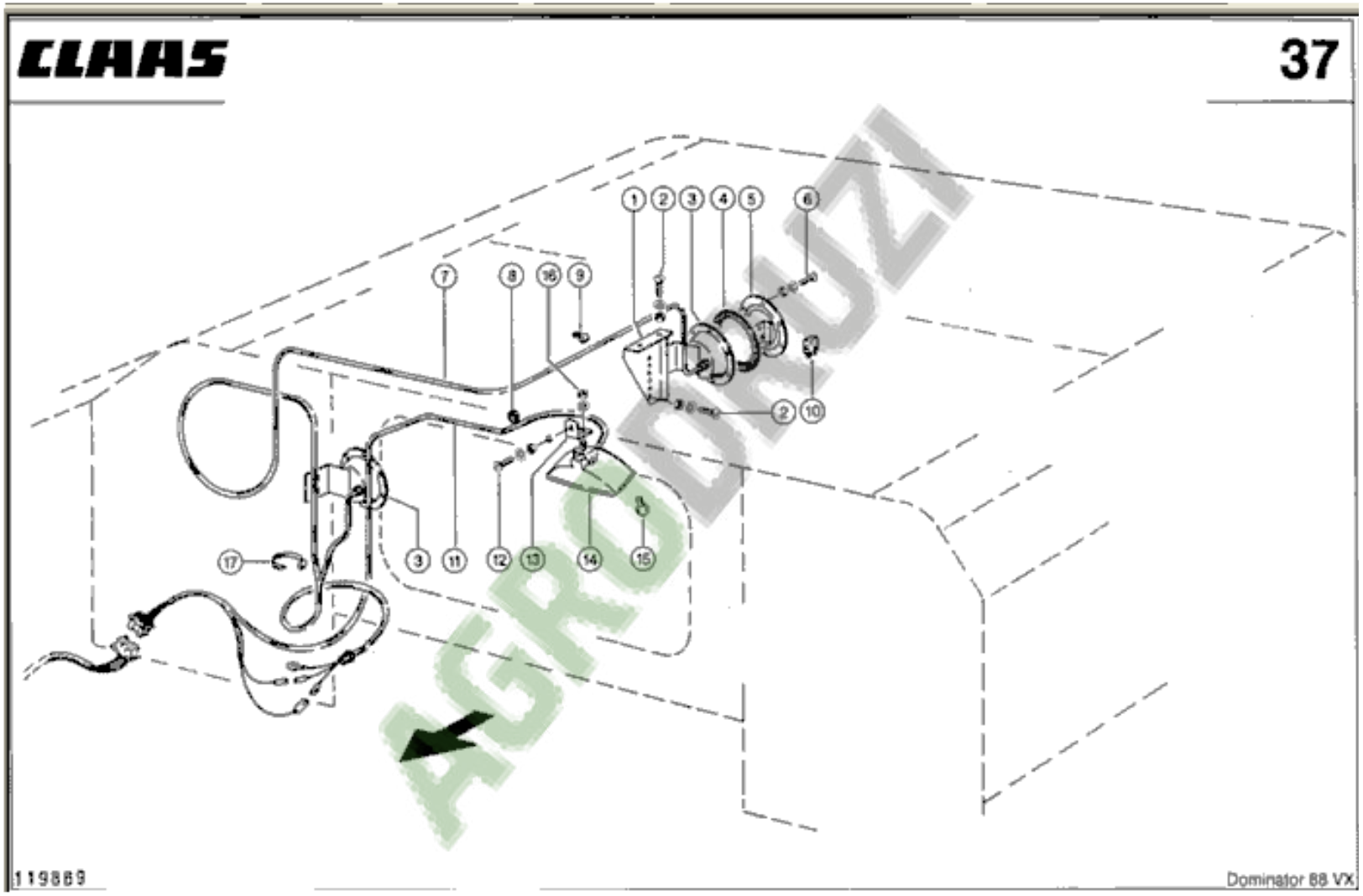
CLAAS
37
1
2
3
4
5
6
7
8
16
9
2
10
17
3
11
12
13
14
15
119869
Dominator 88 VX

AGRODRUZI

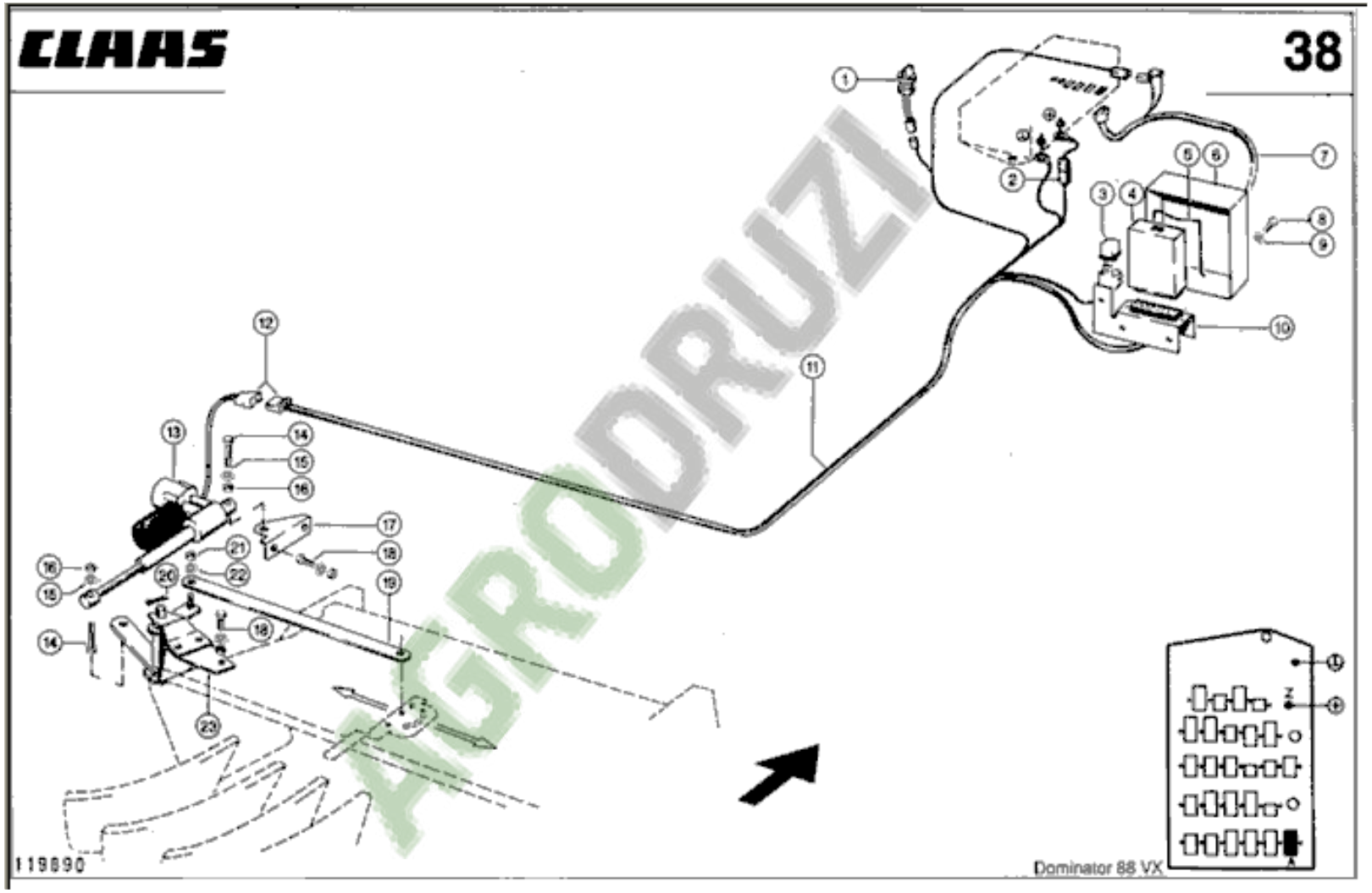
CLAAS
38
119890
Dominator 88 VX

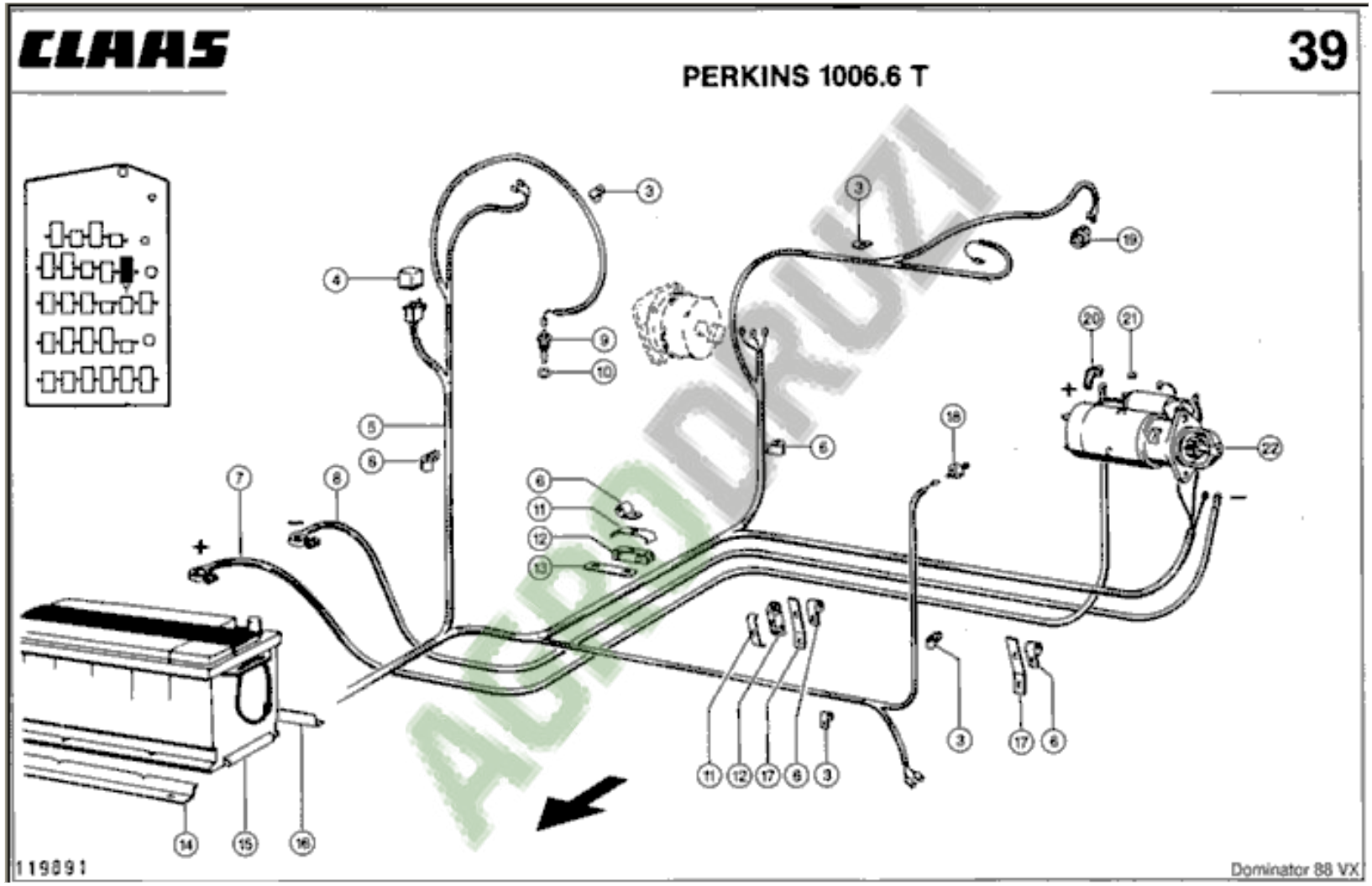
CLAAS
39
PERKINS 1006.6 T
119891
Dominator 88 VX

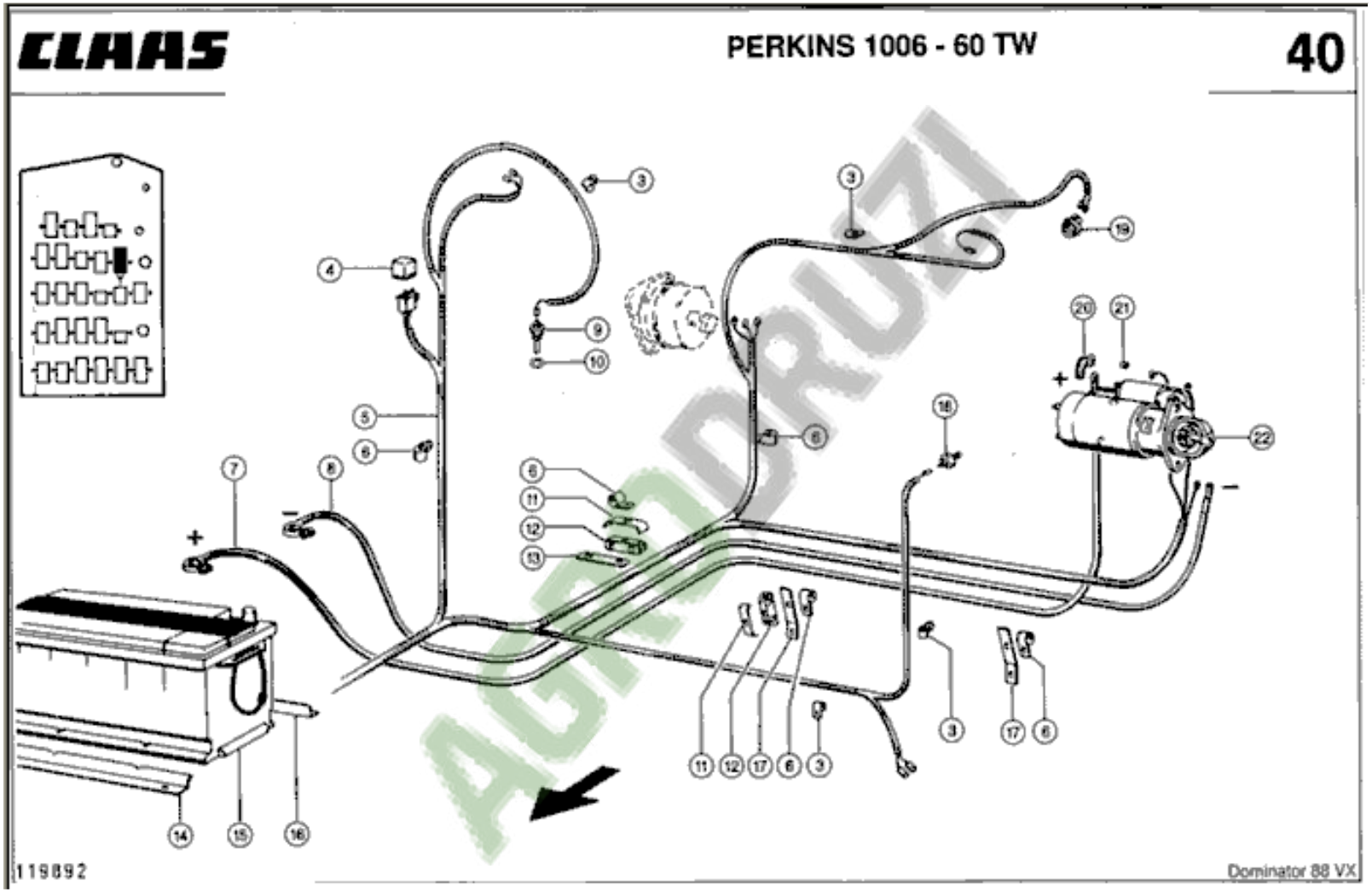
CLAAS
PERKINS 1006 - 60 TW
40
119892
Dominator 88 VX

CLAAS

# PERKINS 1006.6 T

41

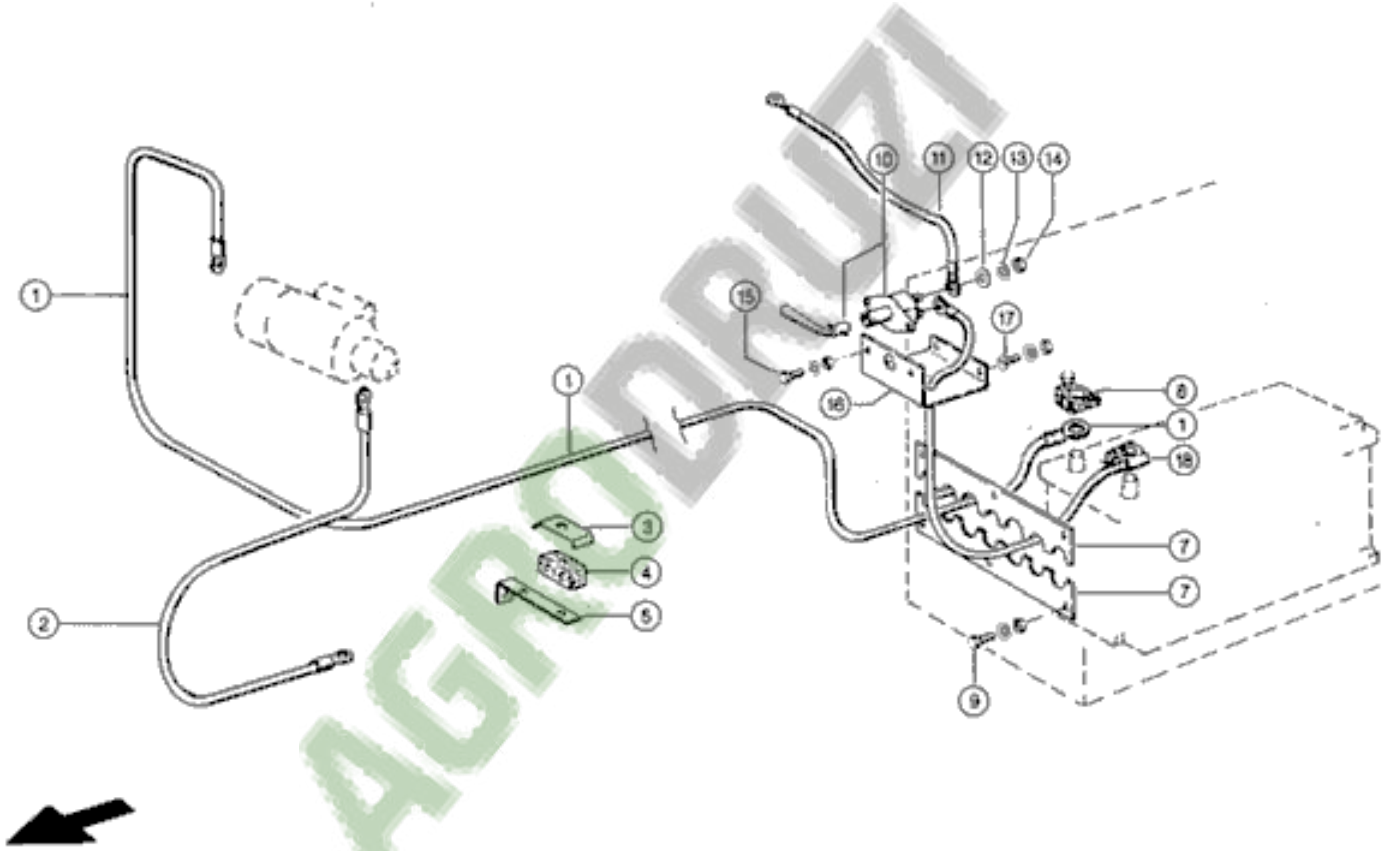


AGRODRUZI

119893

Dominator 88 VX

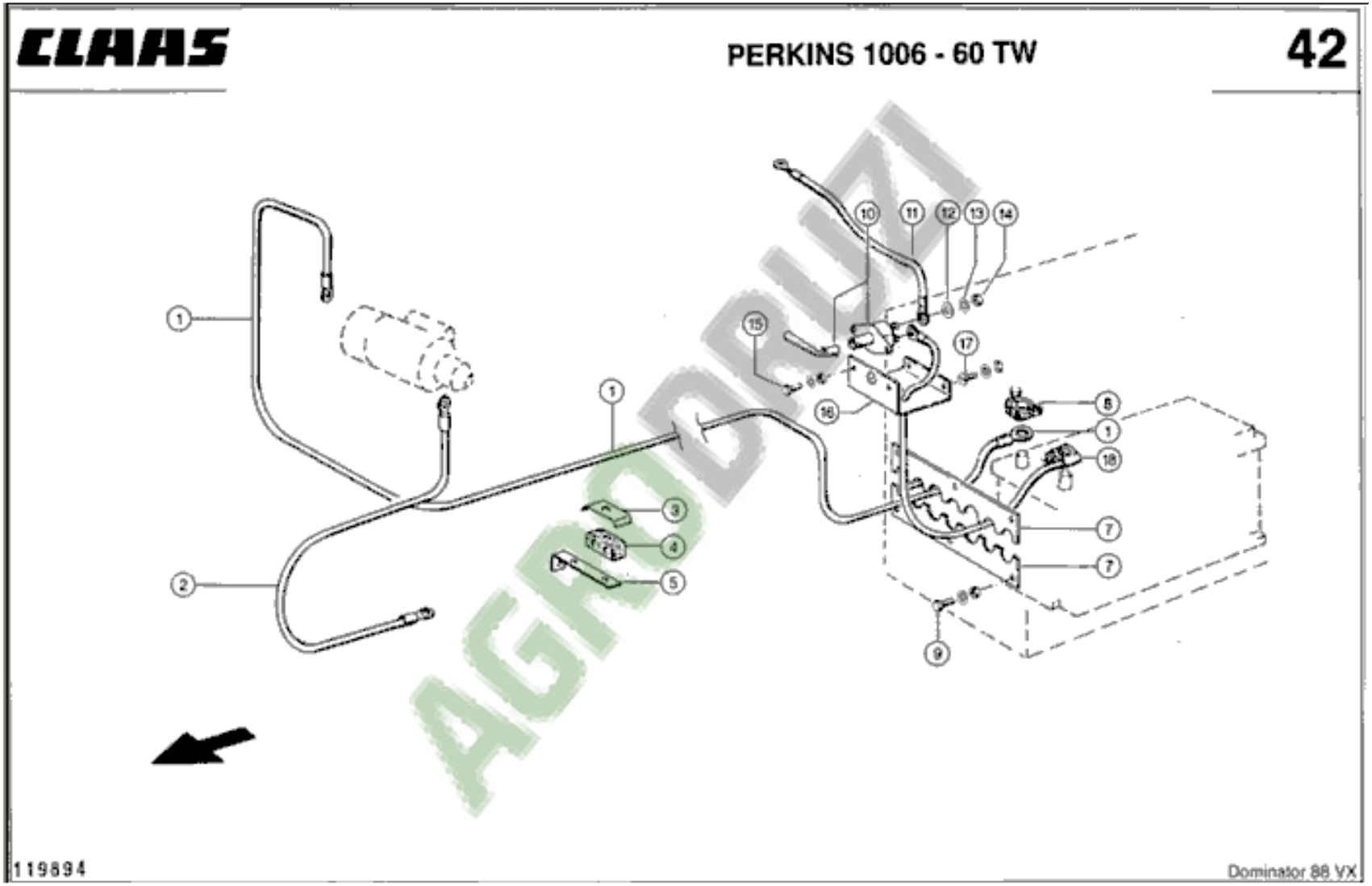
CLAAS
PERKINS 1006 - 60 TW
42
119894
Dominator 88 VX

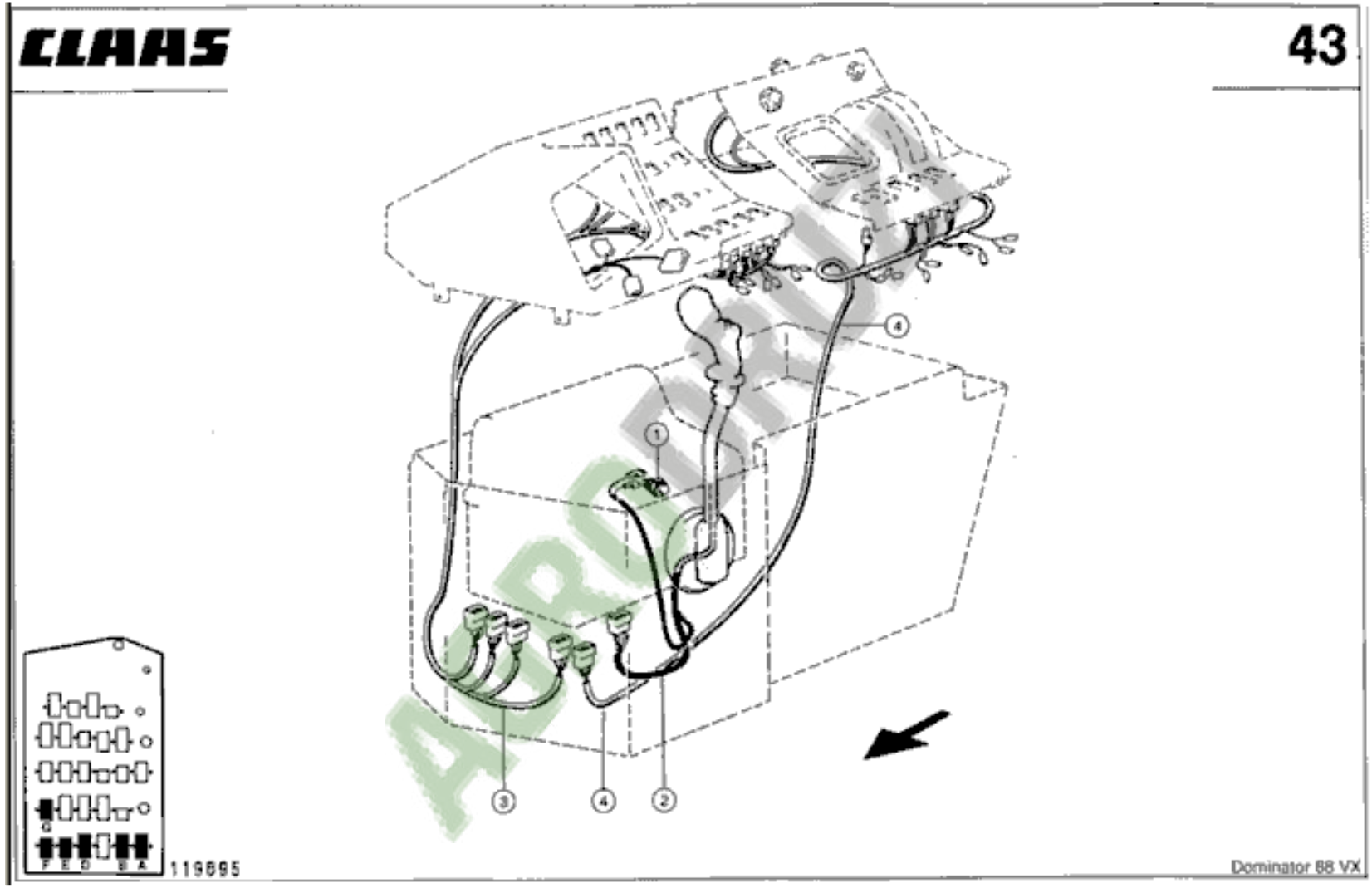
CLAAS
43
1
2
3
4
4
FED
BA
119695
Dominator 88 VX

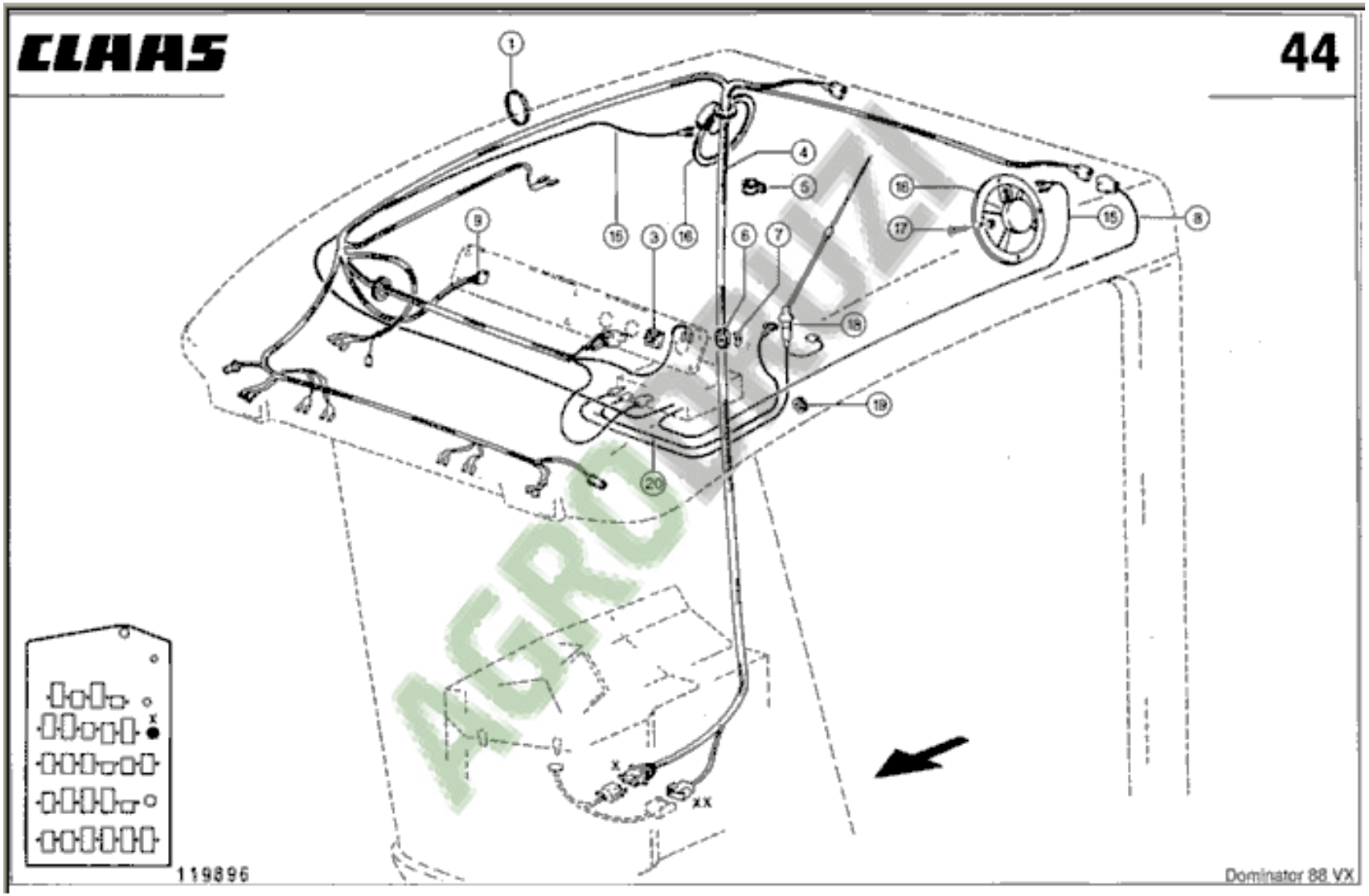
CLAAS
44
1
4
5
16
17
15
8
9
15
3
16
6
7
18
19
20
x
xx
119896
Dominator 88 VX

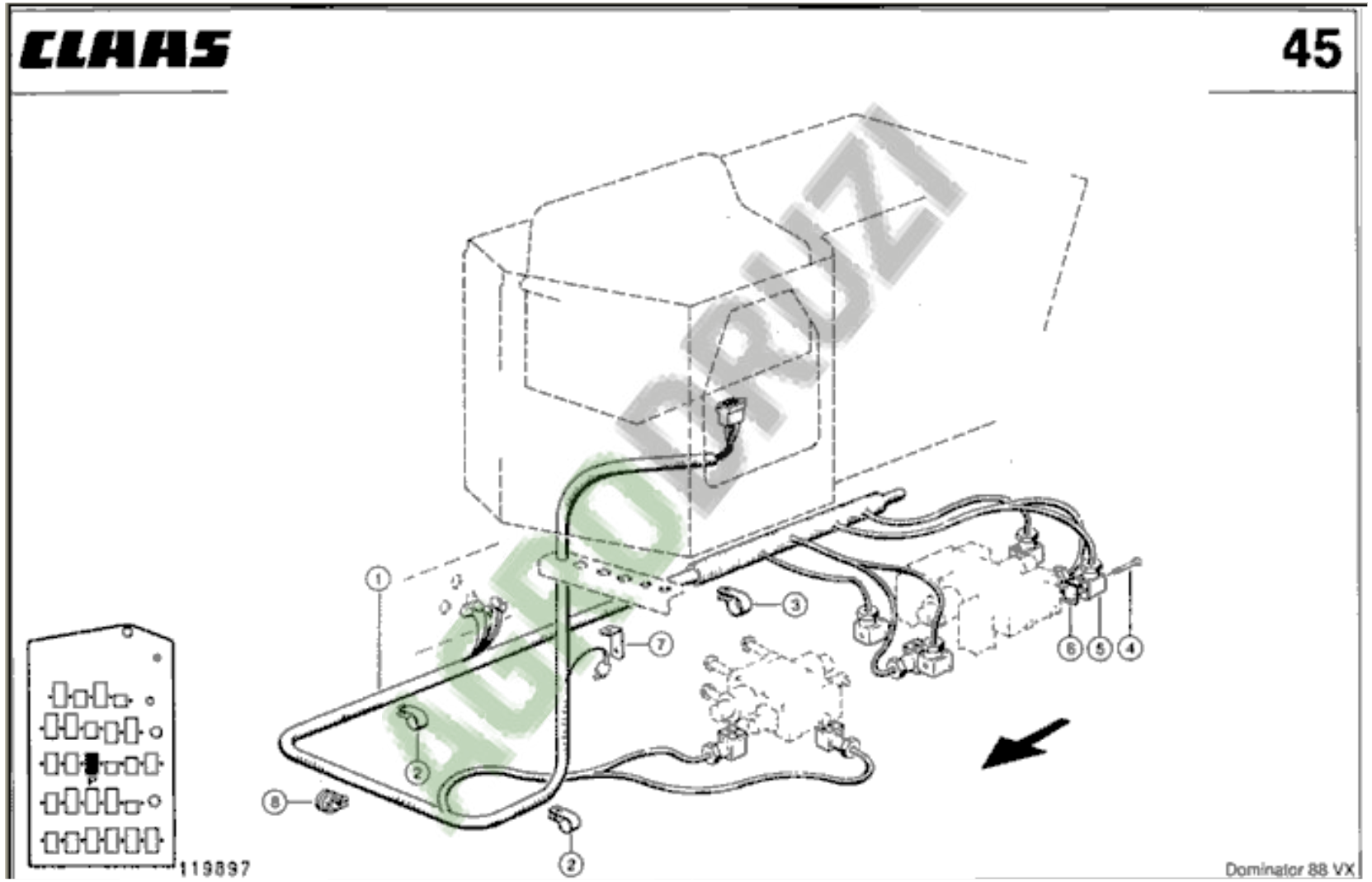
CLAAS
45
1
2
3
4
5
6
7
8
119897
Dominator 88 VX

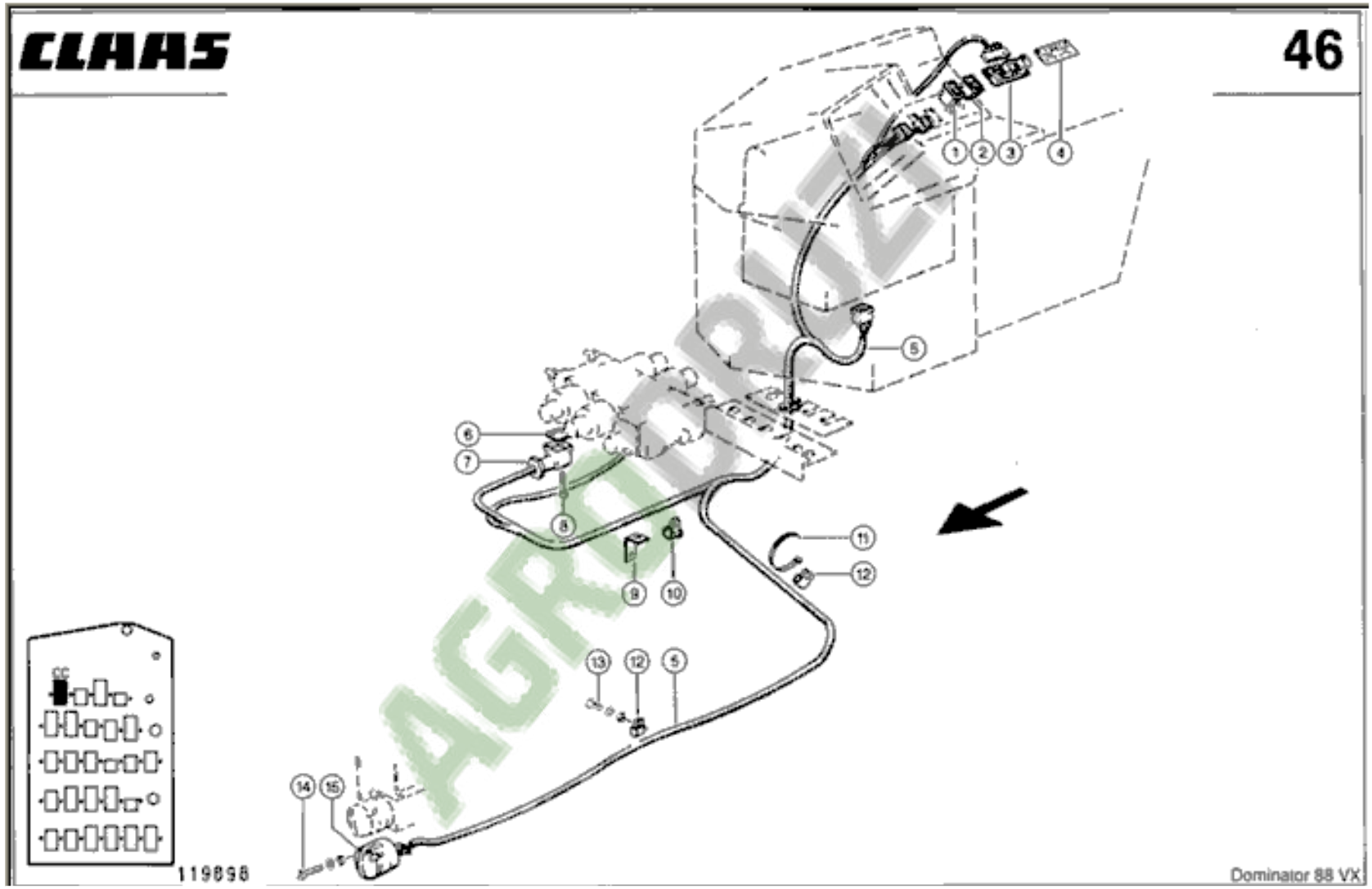
CLAAS
46
1
2
3
4
5
6
7
8
9
10
11
12
13
12
5
14
15
119898
Dominator 88 VX

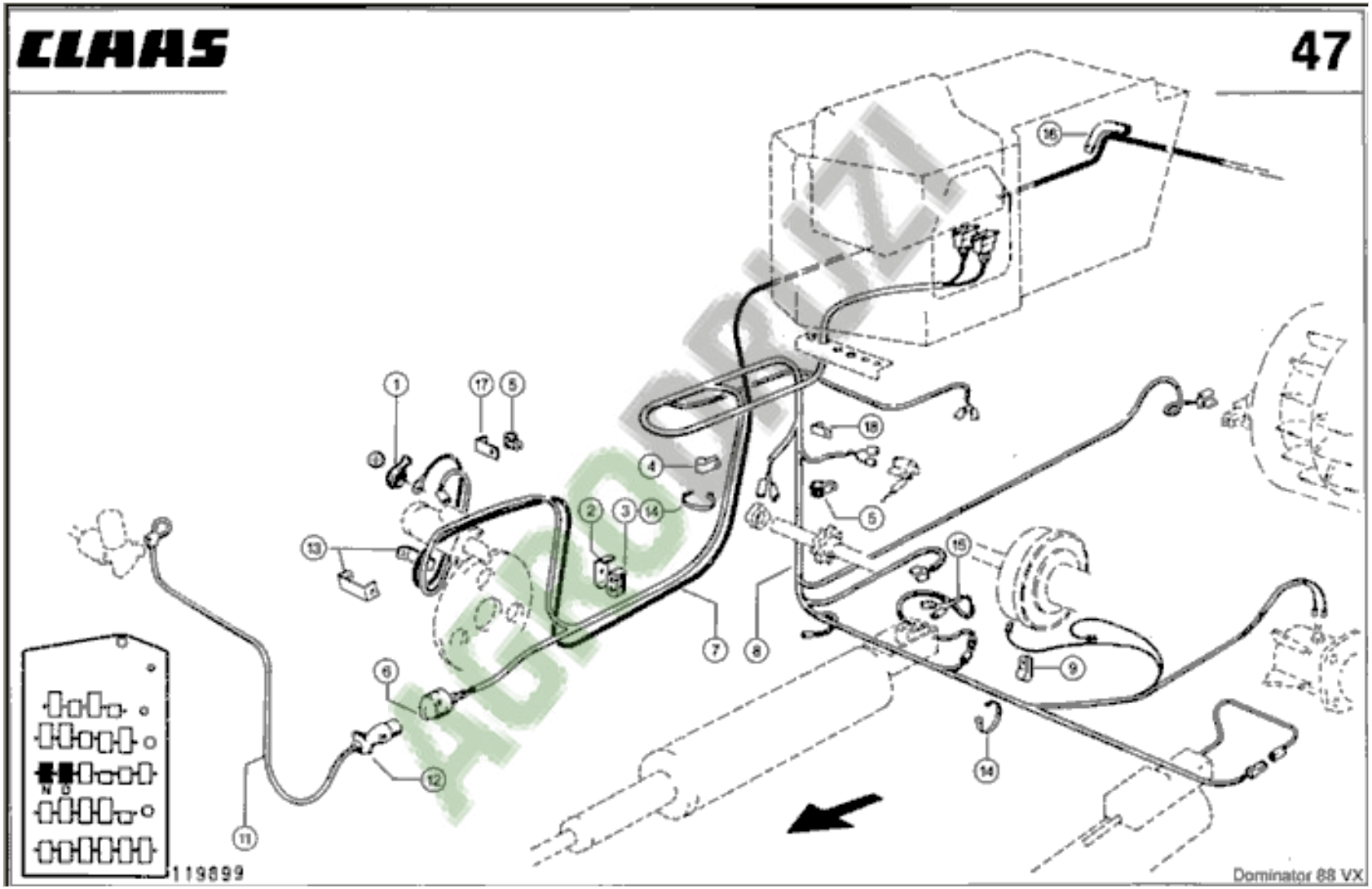
CLAAS
47
119899
Dominator 88 VX

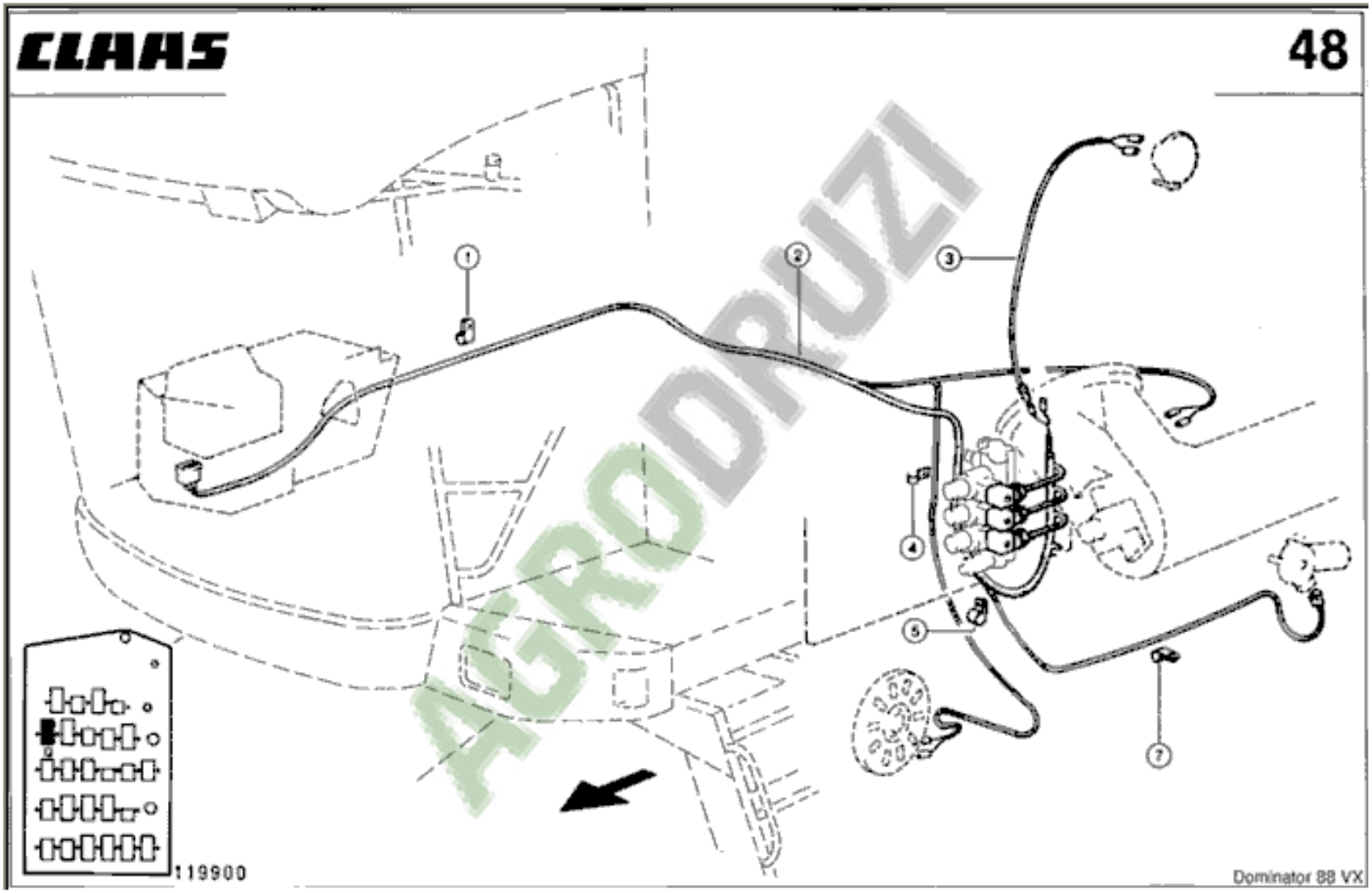


AGRODRUZI

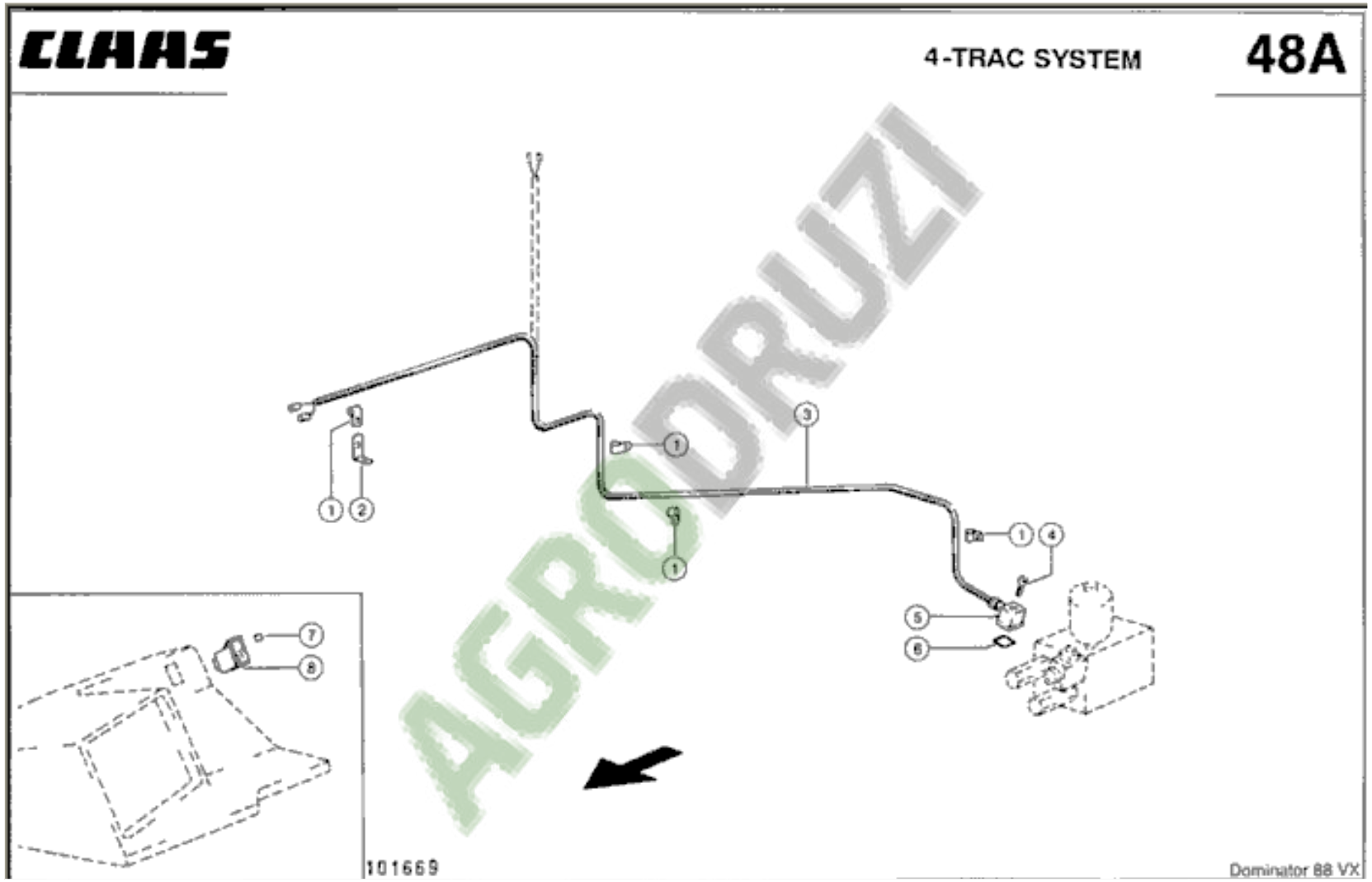


AGRODRUZI

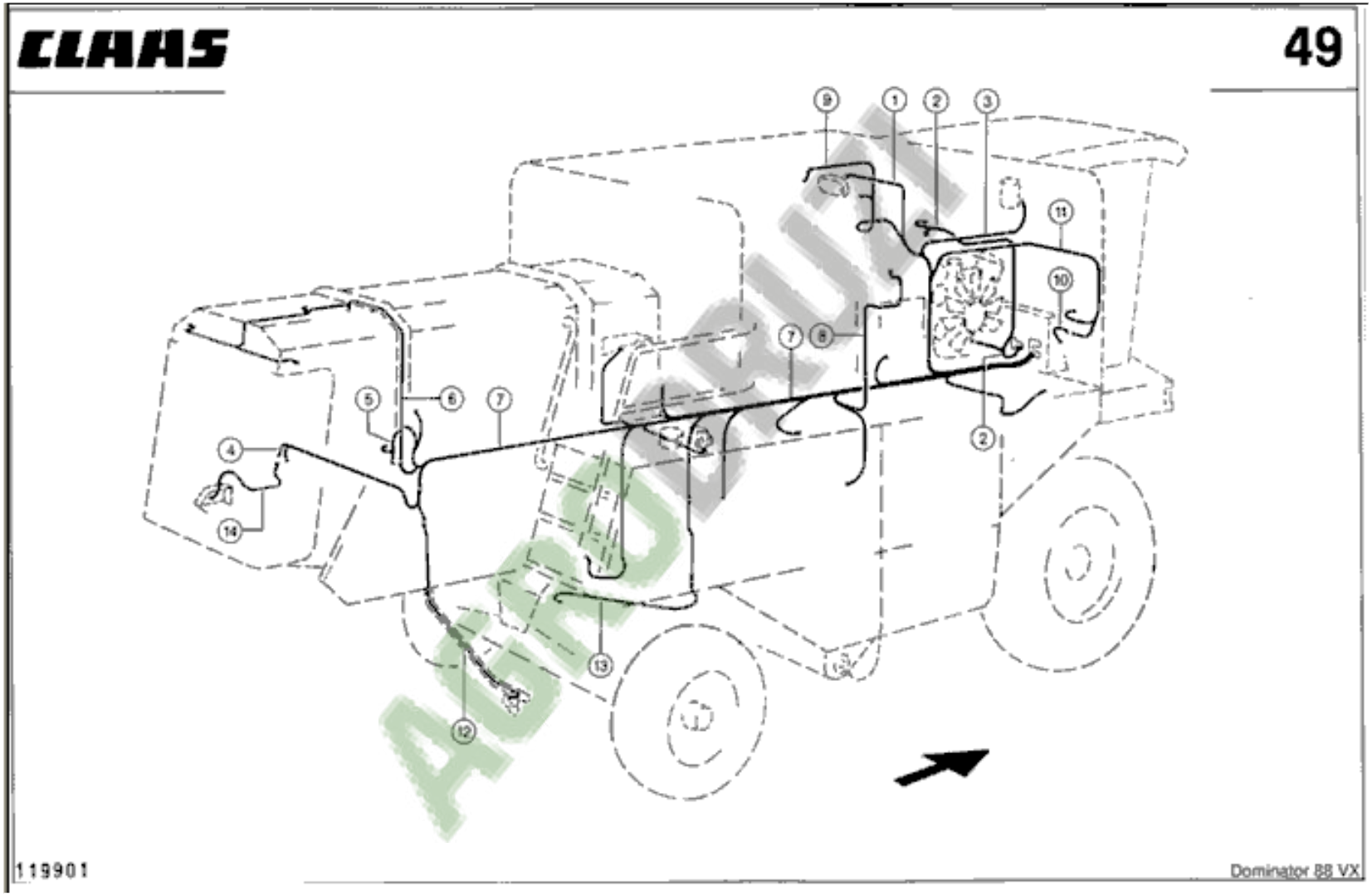
CLAAS
49
119901
Dominator 88 VX

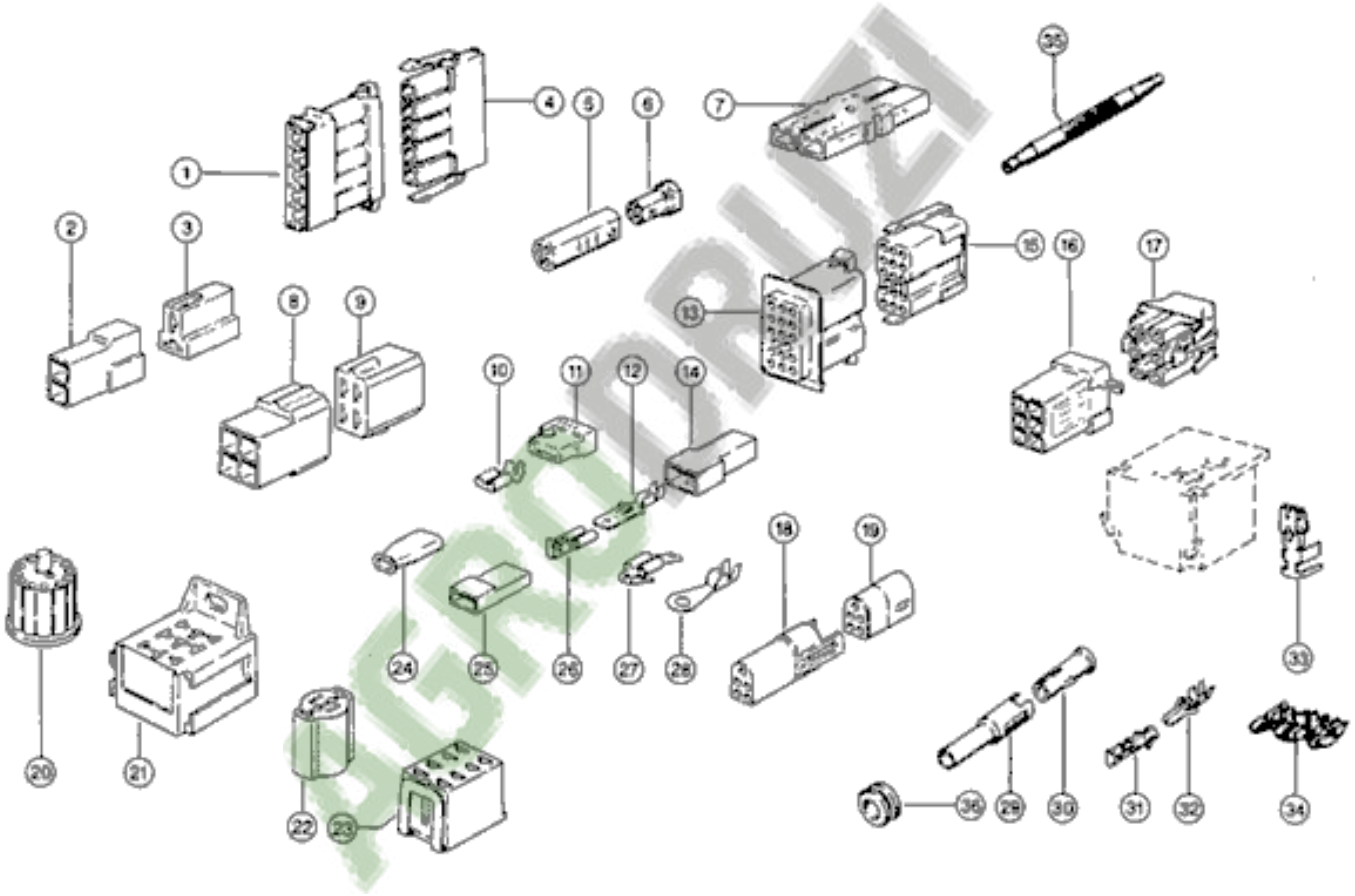
1
2
3
4
5
6
7
8
9
10
11
12
13
14
15
16
17
18
19
20
21
22
23
24
25
26
27
28
29
30
31
32
33
34
35
36

AGRODRUZI

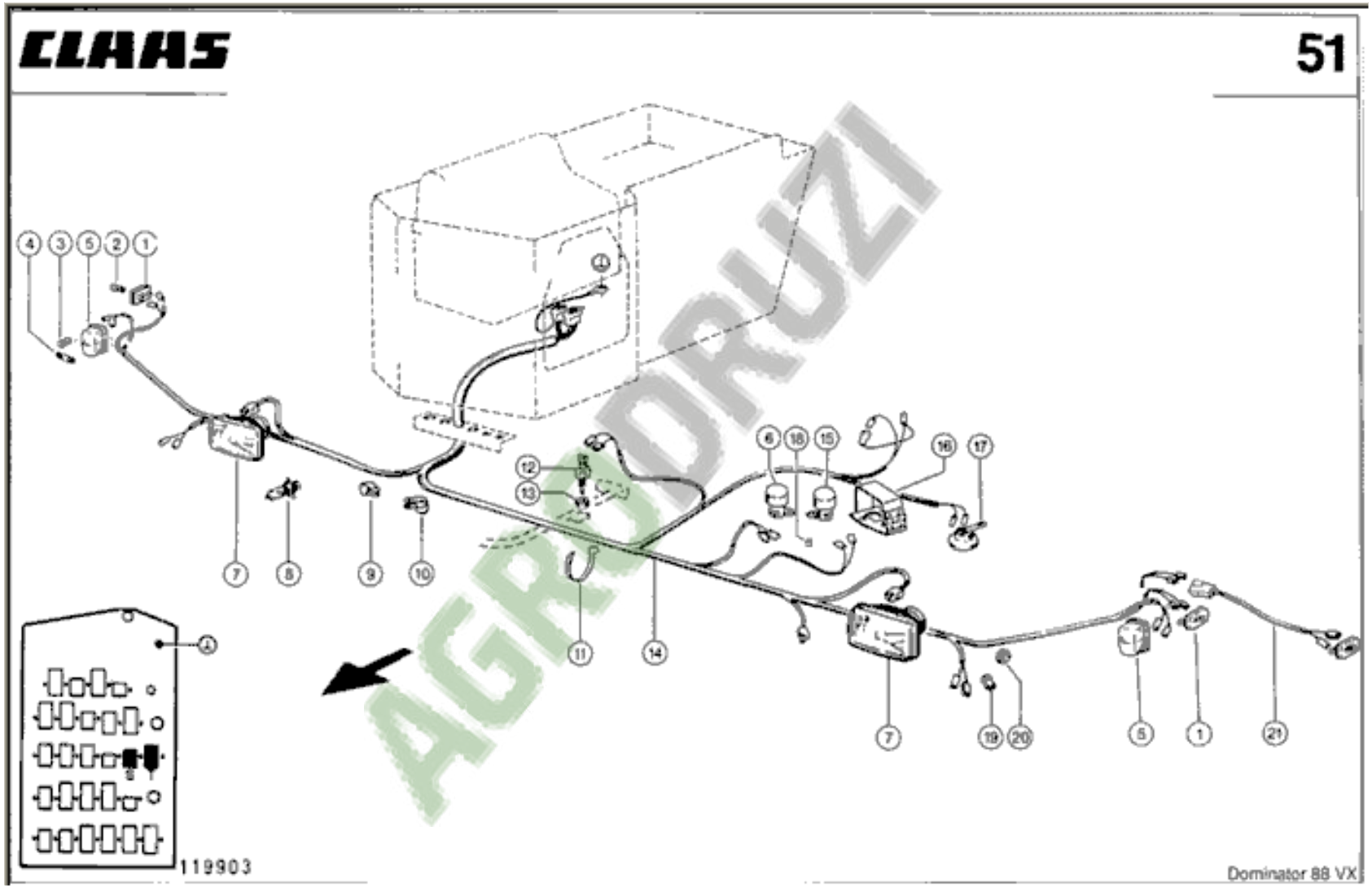


AGRODRUZI

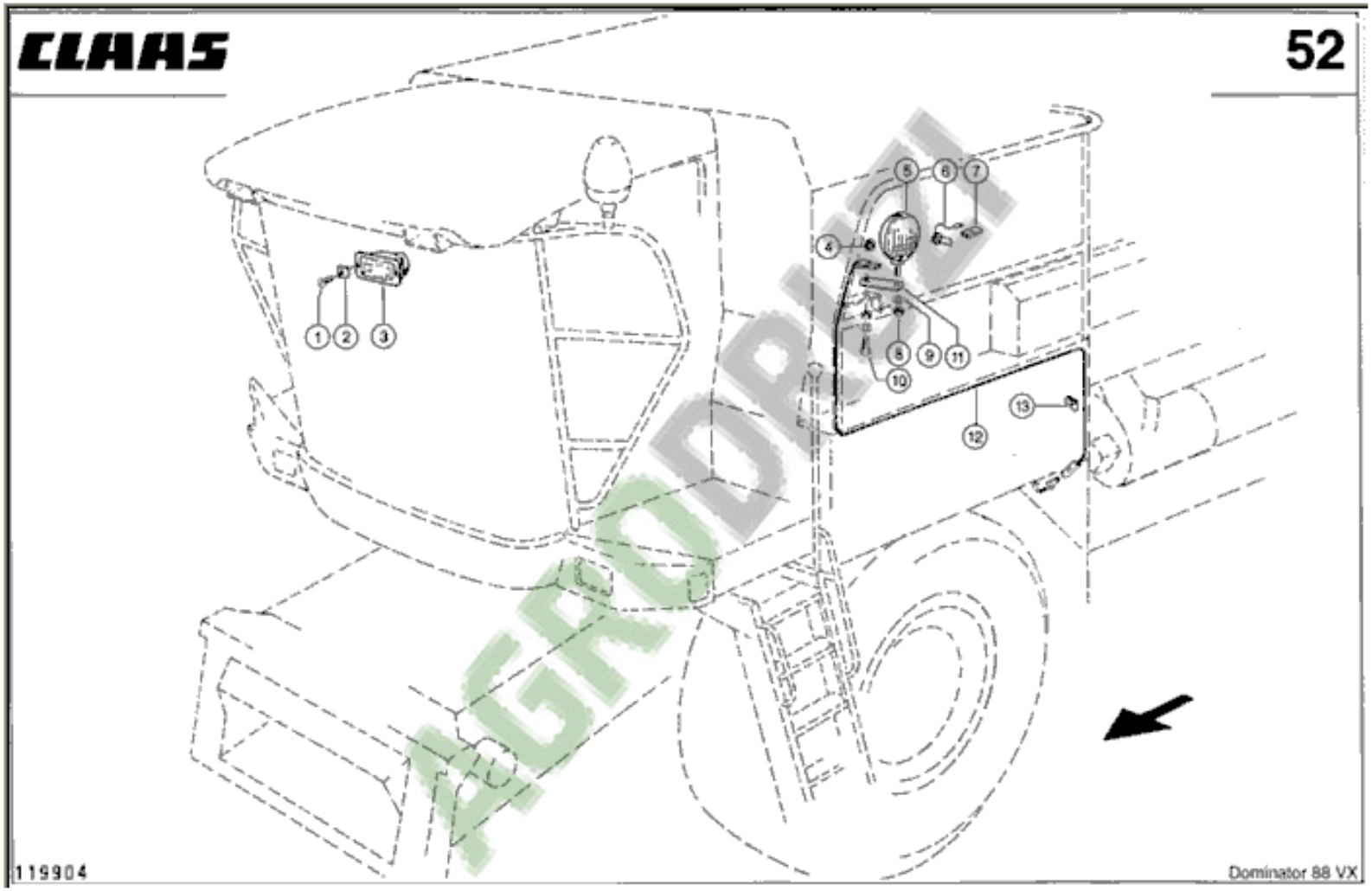
CLAAS
52
1
2
3
4
5
6
7
8
9
10
11
12
13
119904
Dominator 88 VX

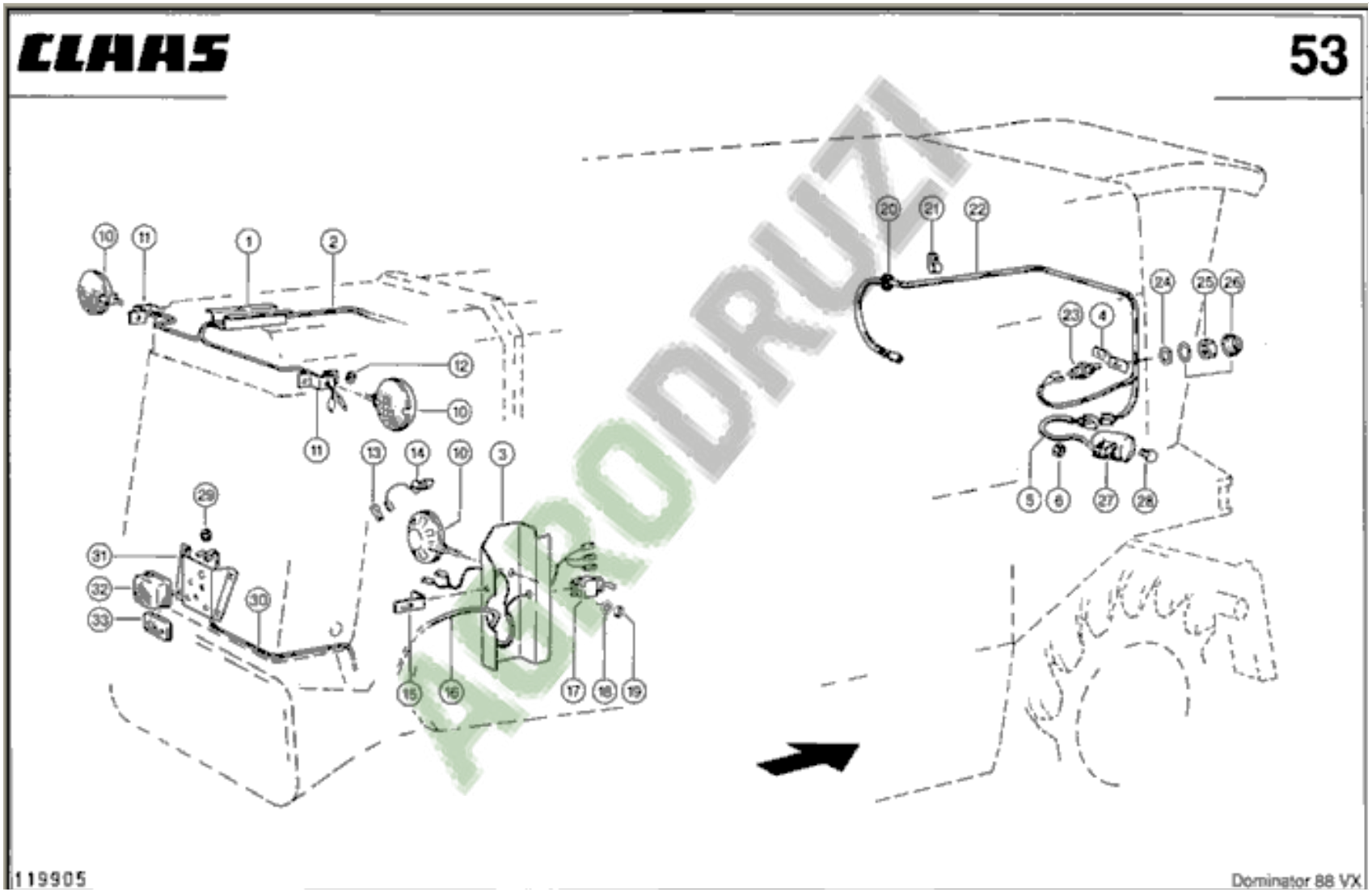
CLAAS
53
119905
Dominator 88 VX

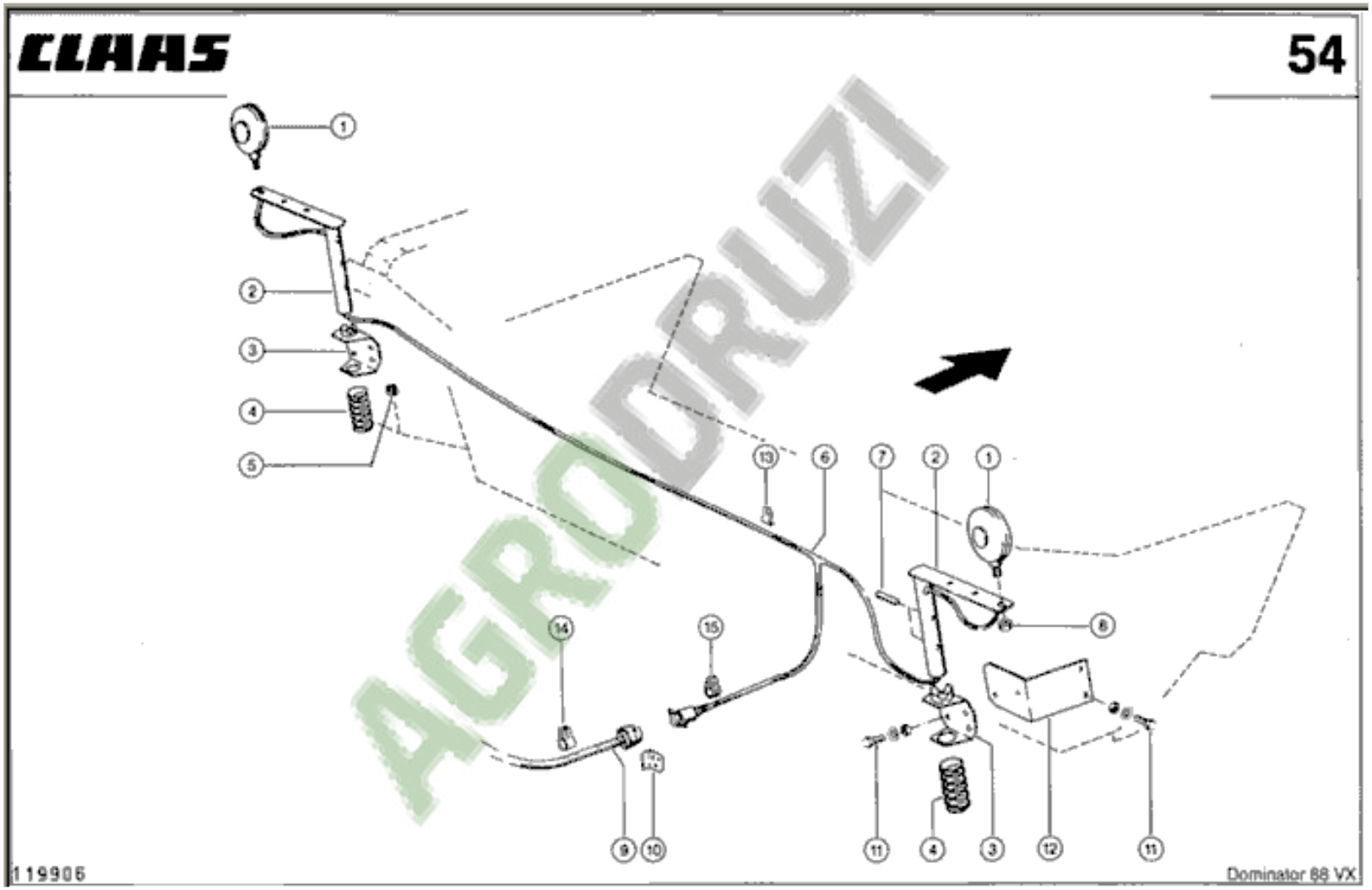
CLAAS
54
1
2
3
4
5
13
6
7
2
1
8
14
15
9
10
11
4
3
12
11
119906
Dominator 88 VX

AGRODRUZI

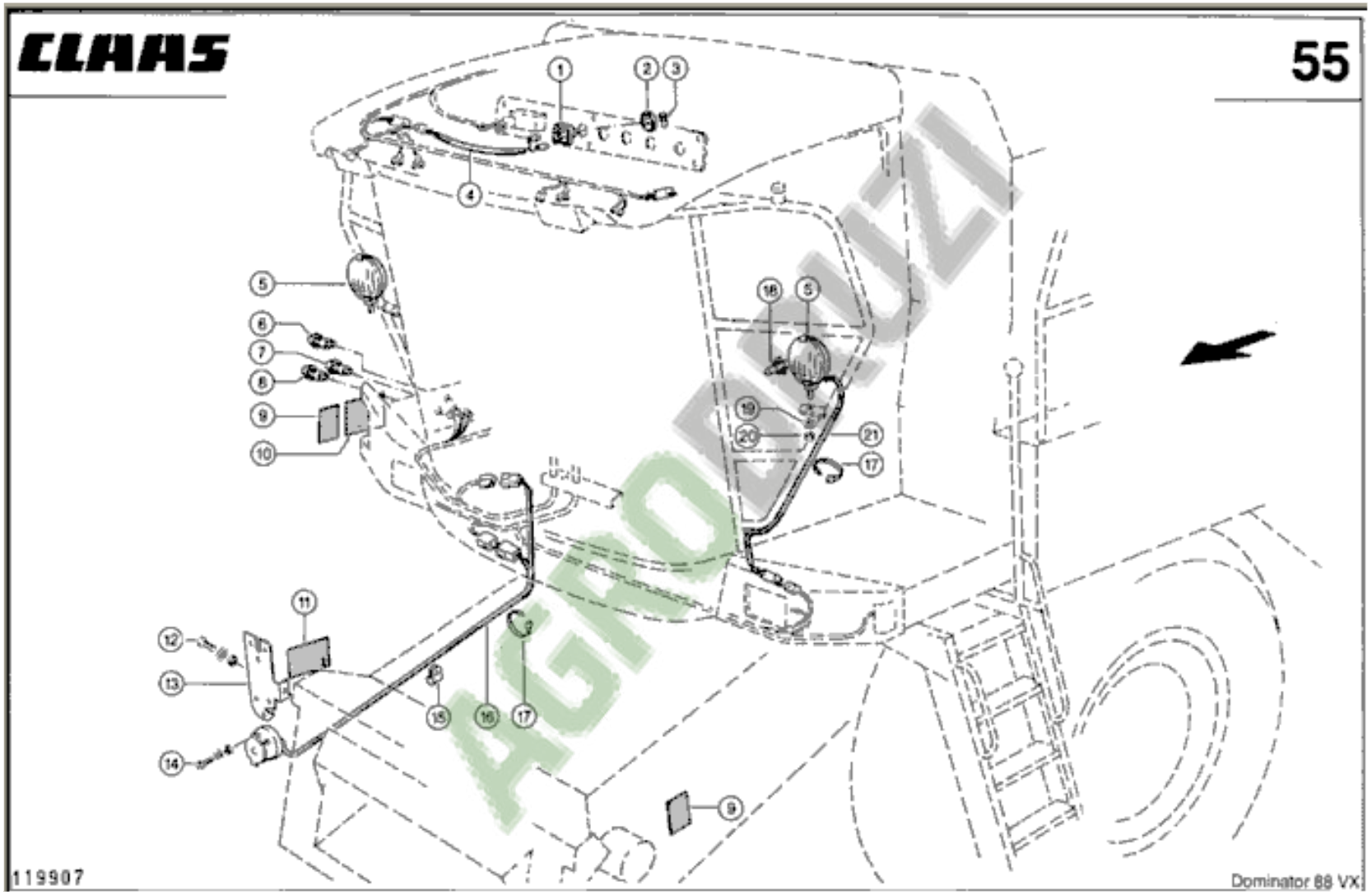
CLAAS
55
1
2
3
4
5
6
7
8
9
10
11
12
13
14
15
16
17
18
19
20
21
119907
Dominator 88 VX

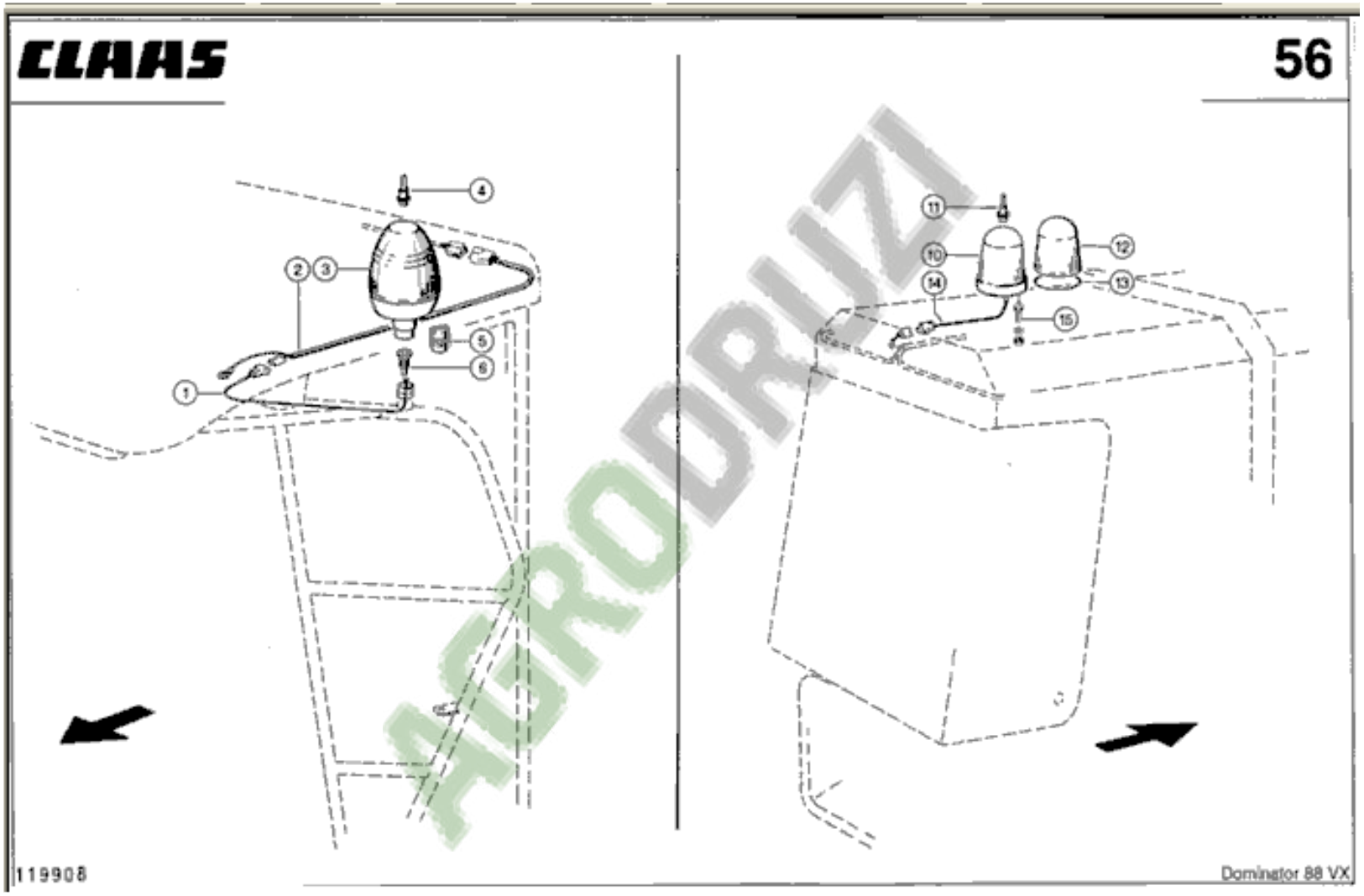


AGRODRUZI

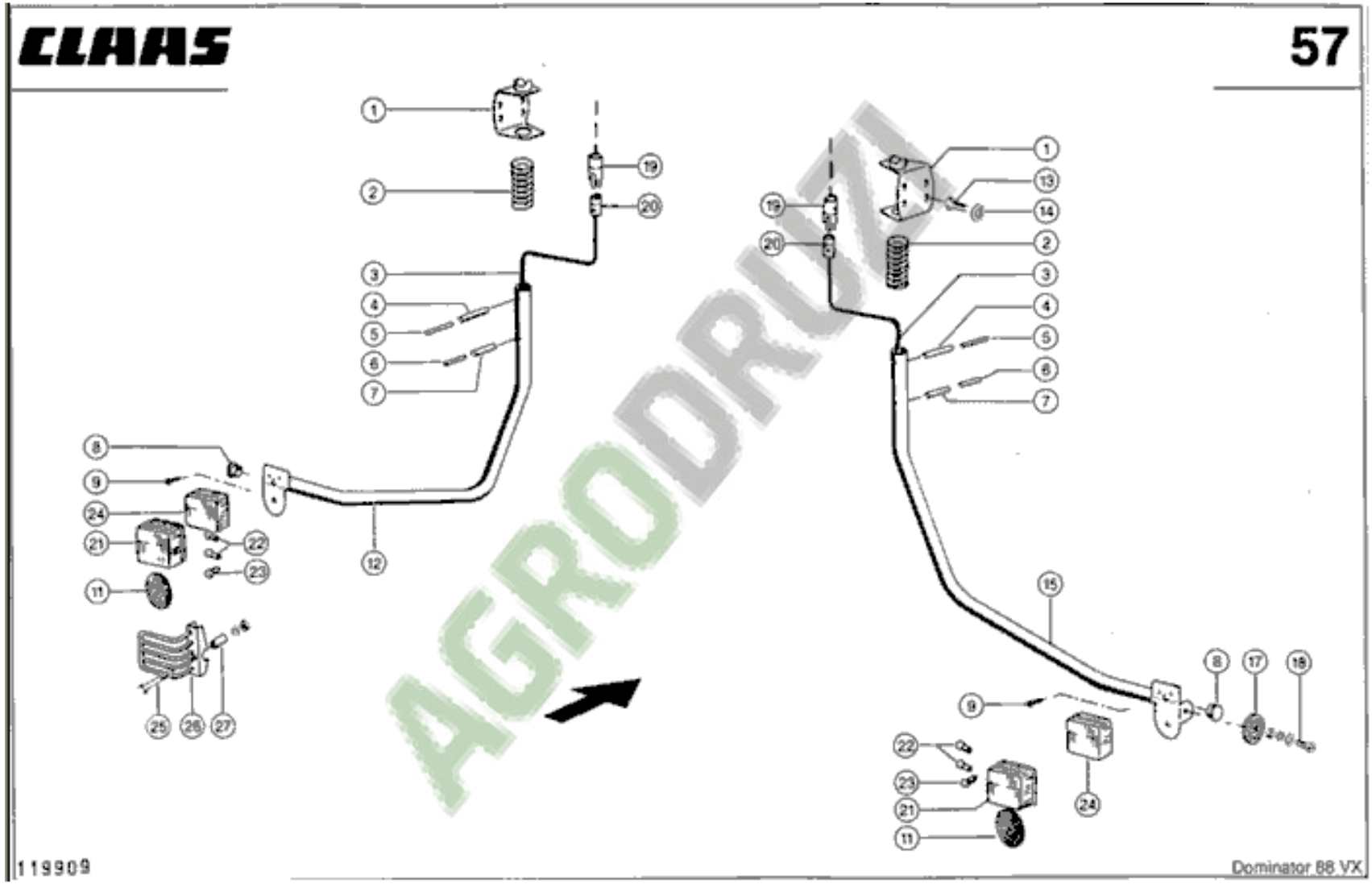


AGRODRUZI

Dreschwerk

## Getreide

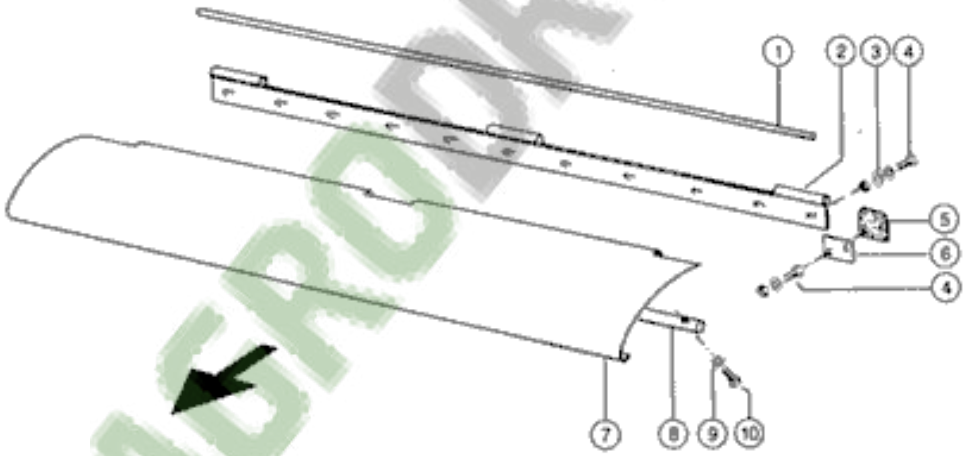


AGRODRUZI

CLAAS

59

## Mais

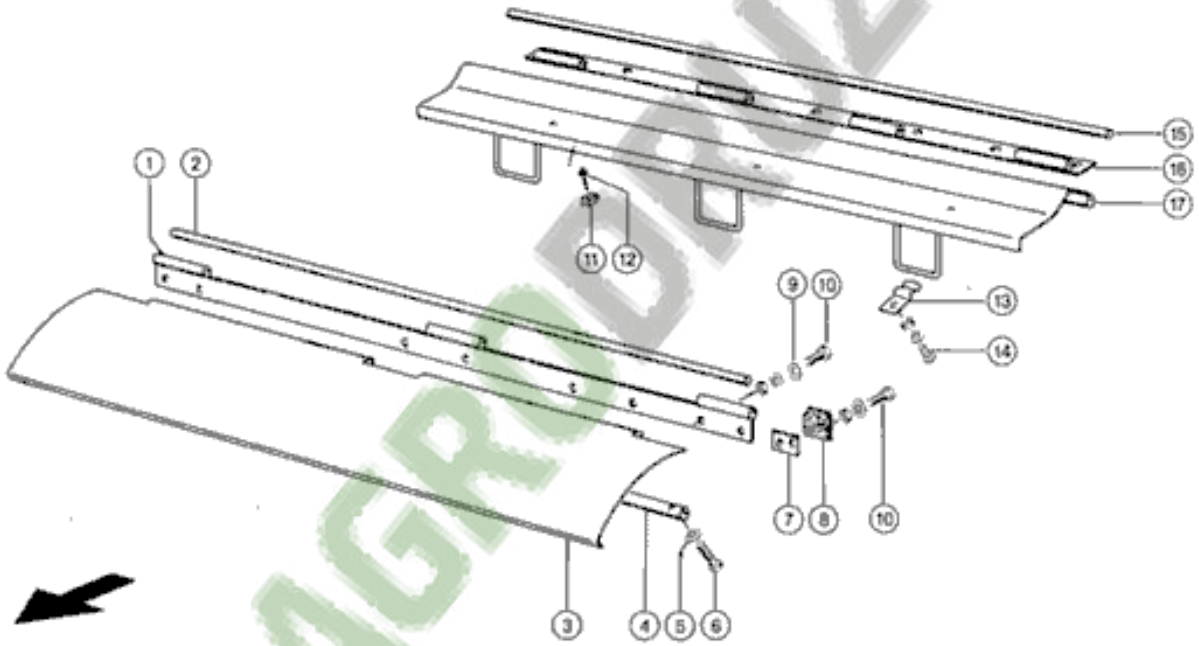


AGRODRUZI

119911

Dominator 88 VX

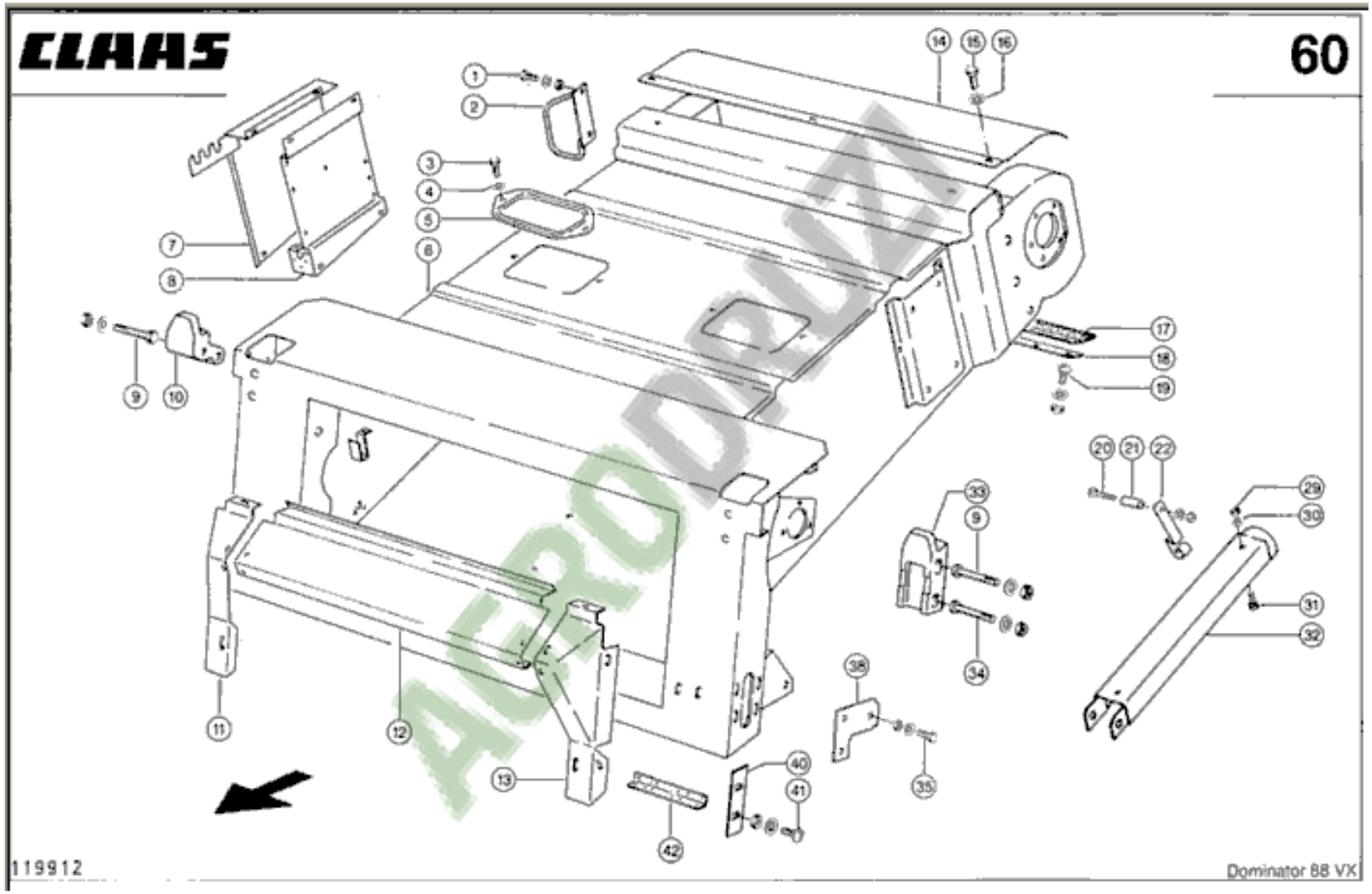
CLAAS
60
1
2
3
4
5
6
7
8
9
10
11
12
13
14
15
16
17
18
19
20
21
22
29
30
31
32
33
9
34
35
38
40
41
42
119912
Dominator 88 VX

AGRODRIX

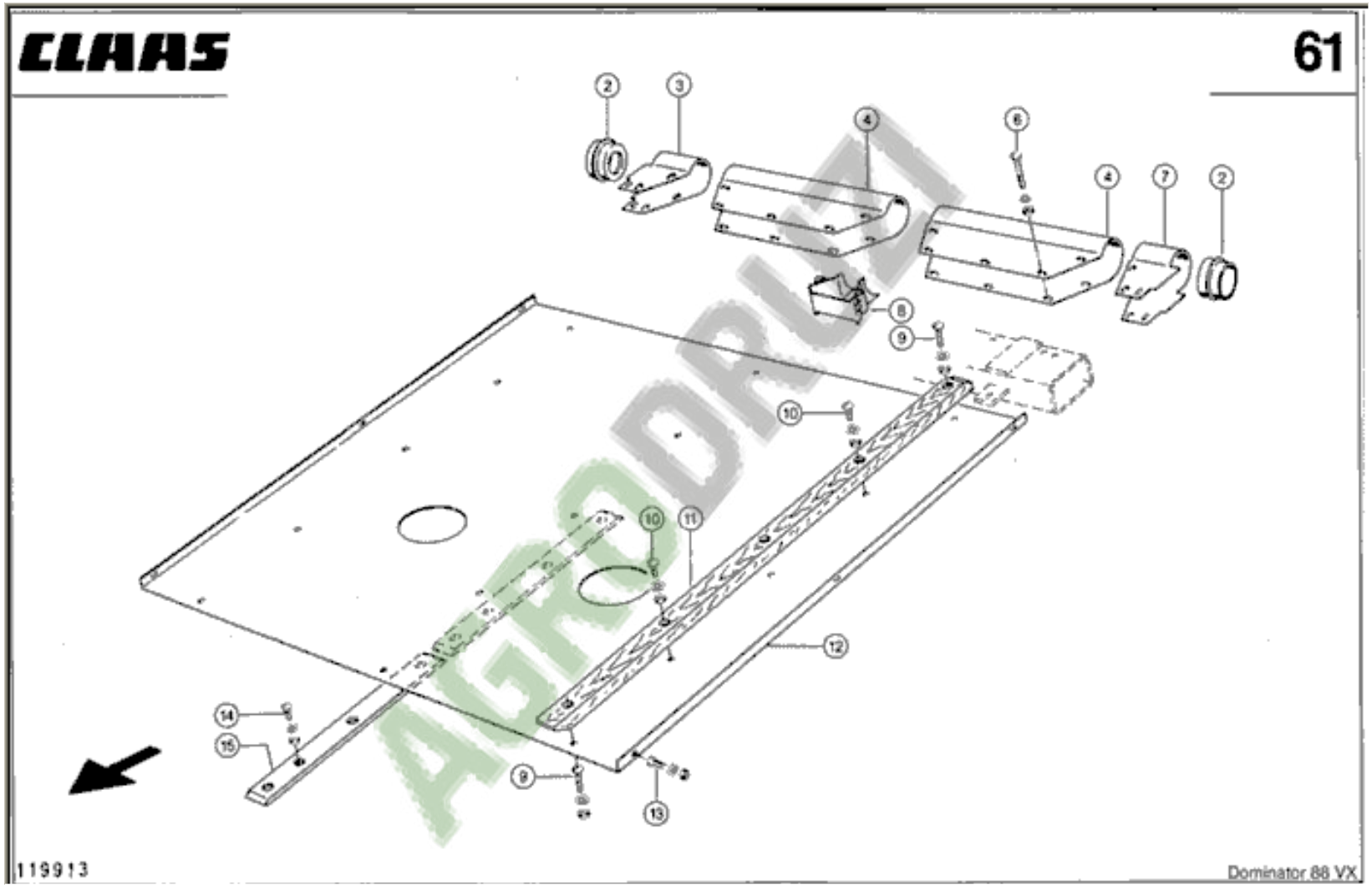
CLAAS
61
2
3
4
6
4
7
2
8
9
10
10
11
12
14
15
9
13
119913
Dominator 88 VX

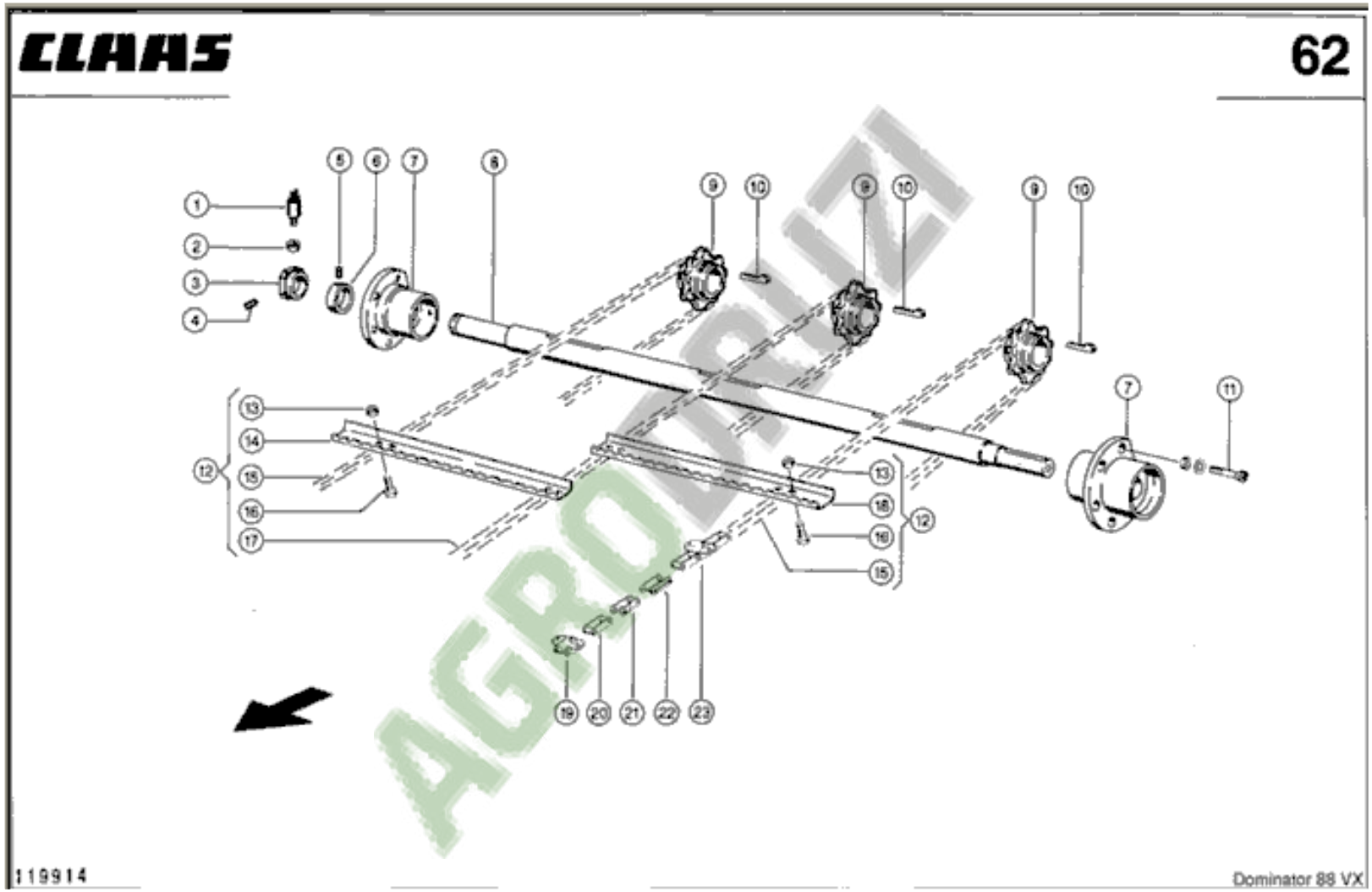
CLAAS
62
119914
Dominator 88 VX

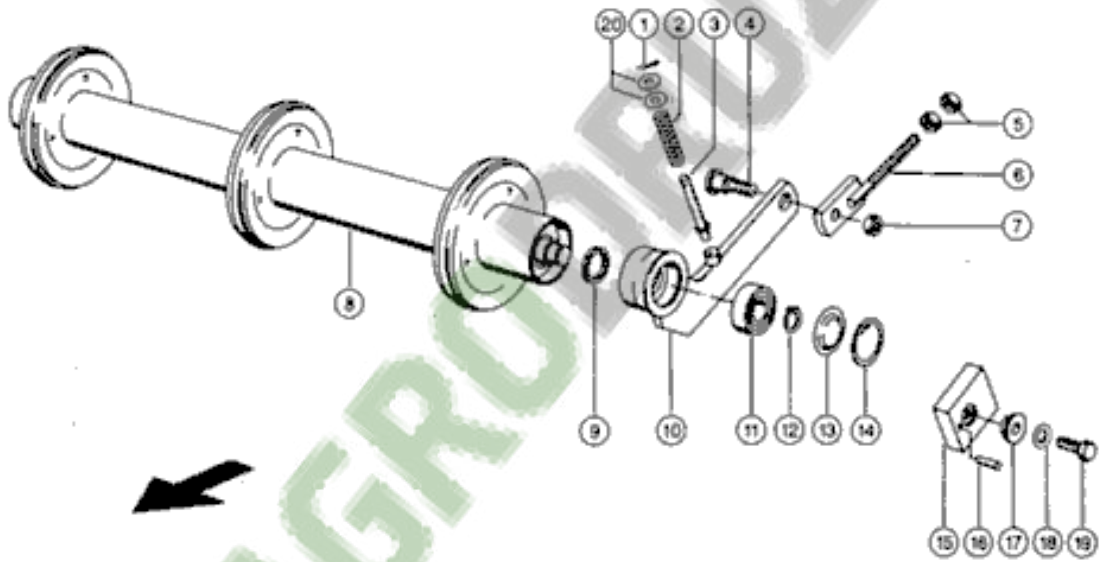


AGRODRUZI

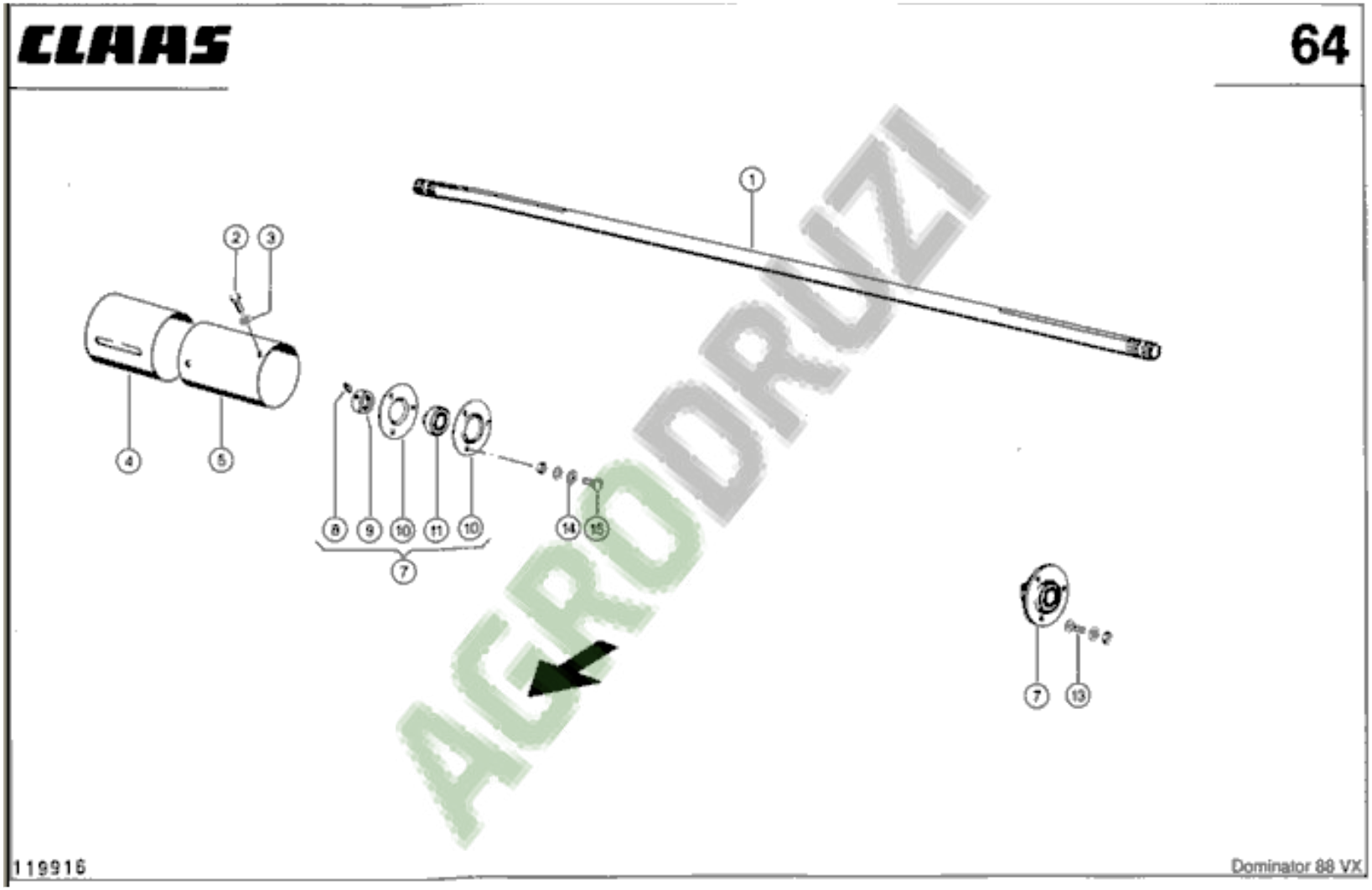


AGRODRUZI

CLAAS

65

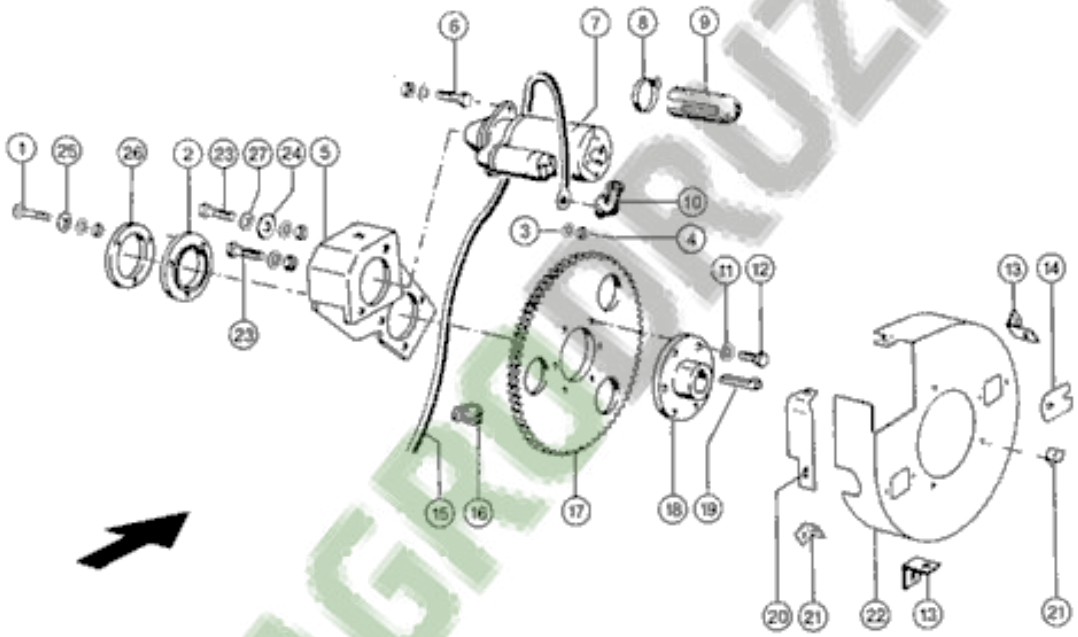


AGRODRUZI

119917

Dominator 88 VX

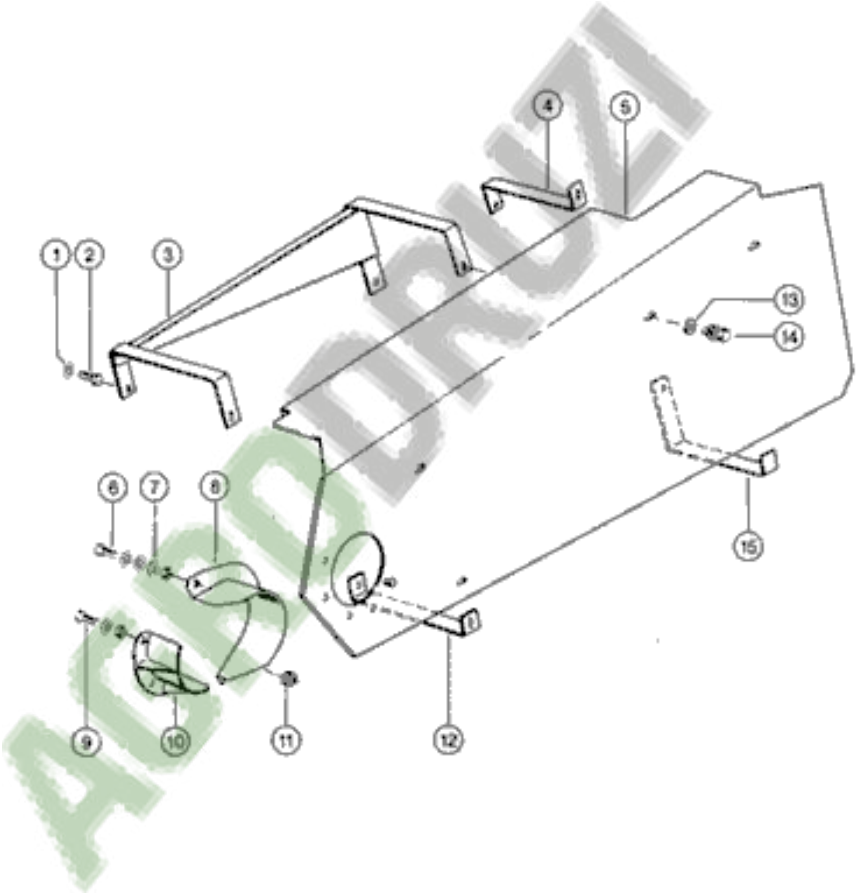


AGRODRUZI

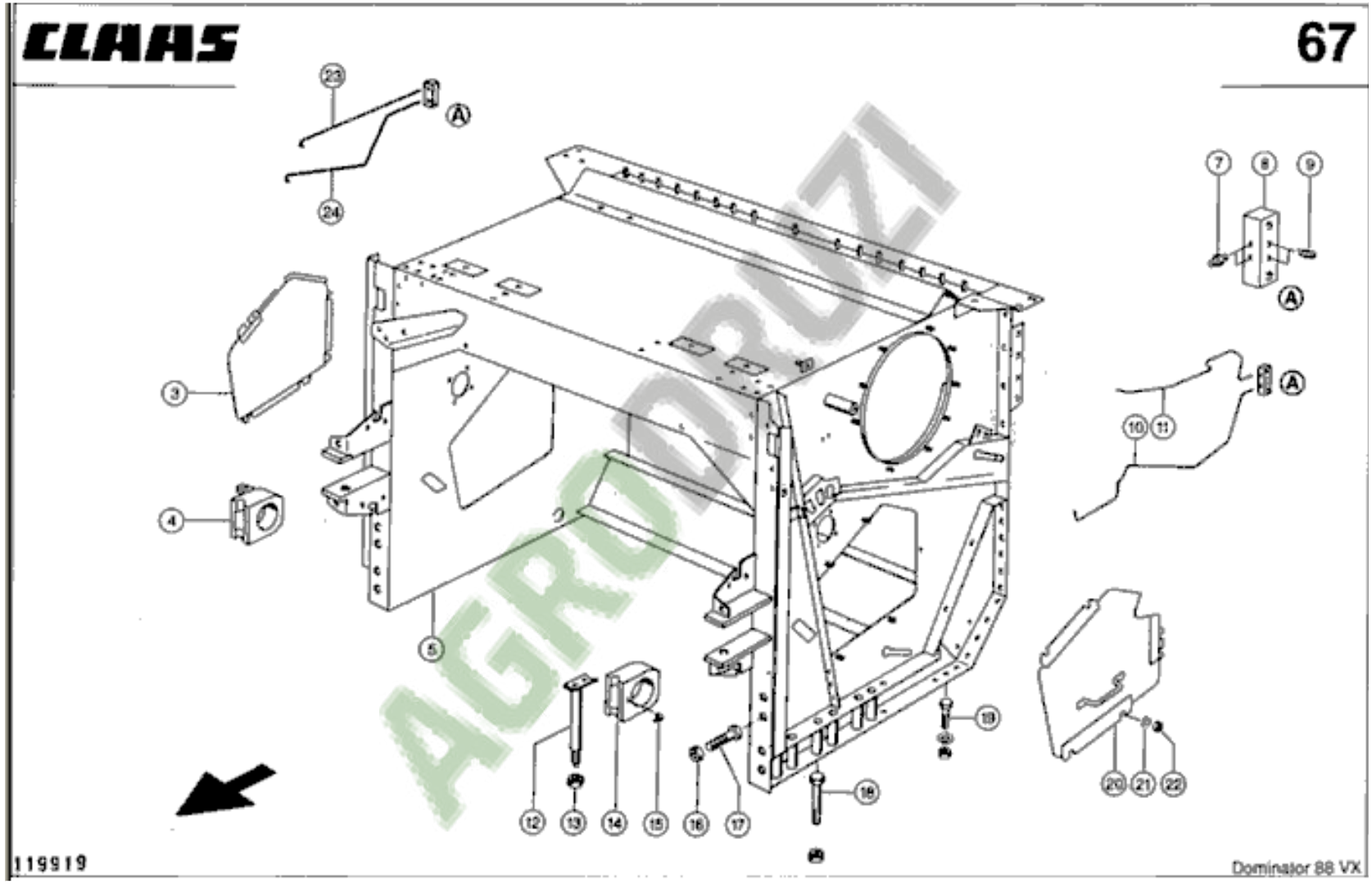
CLAAS
67
23
24
A
7
8
9
A
3
10
11
A
4
5
12
13
14
15
16
17
18
19
20
21
22
119919
Dominator 88 VX

AGRODRUZI

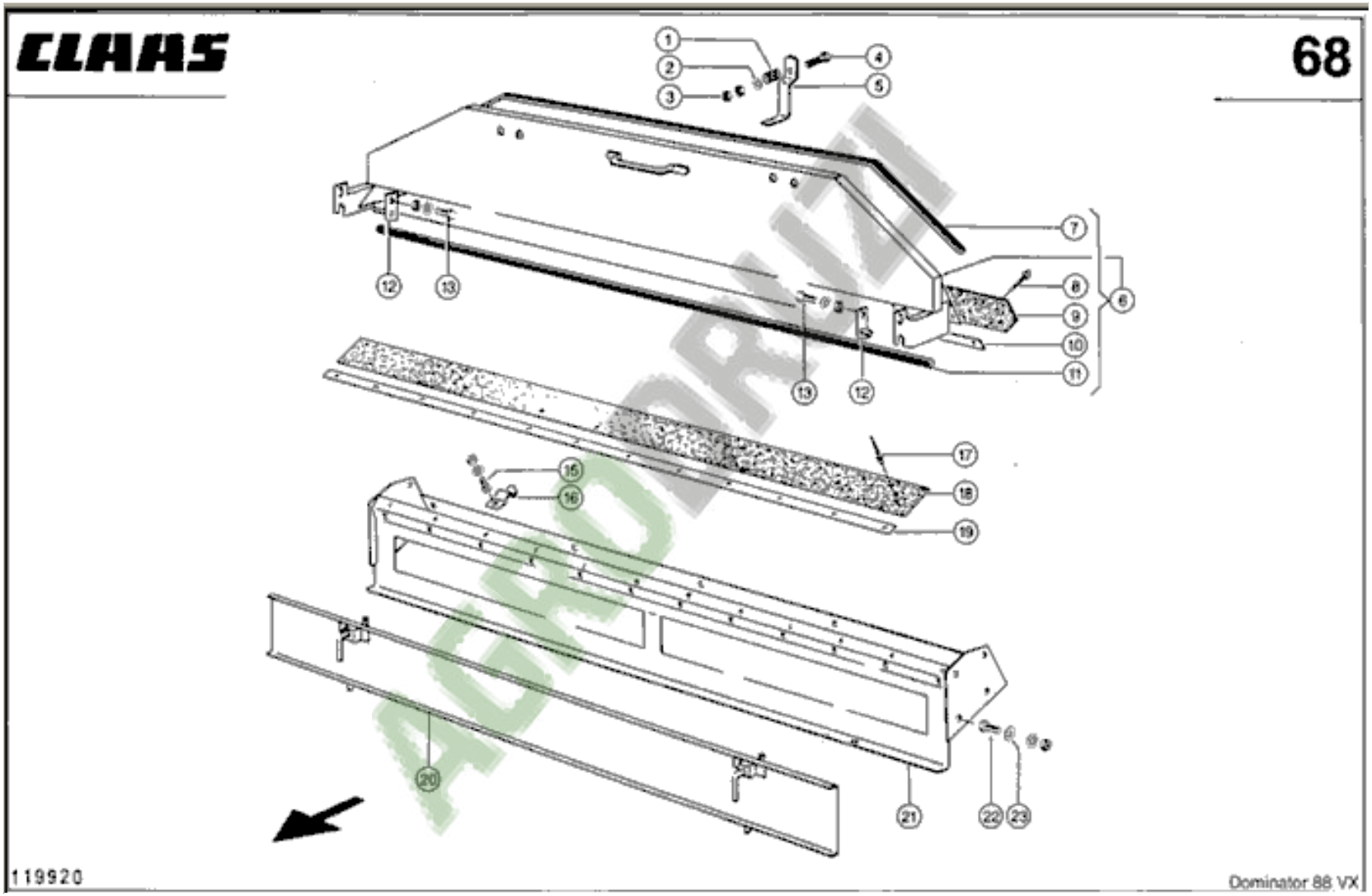
CLAAS
68
1
2
3
4
5
6
7
8
9
10
11
12
13
12
13
15
16
17
18
19
20
21
22
23
119920
Dominator 88 VX

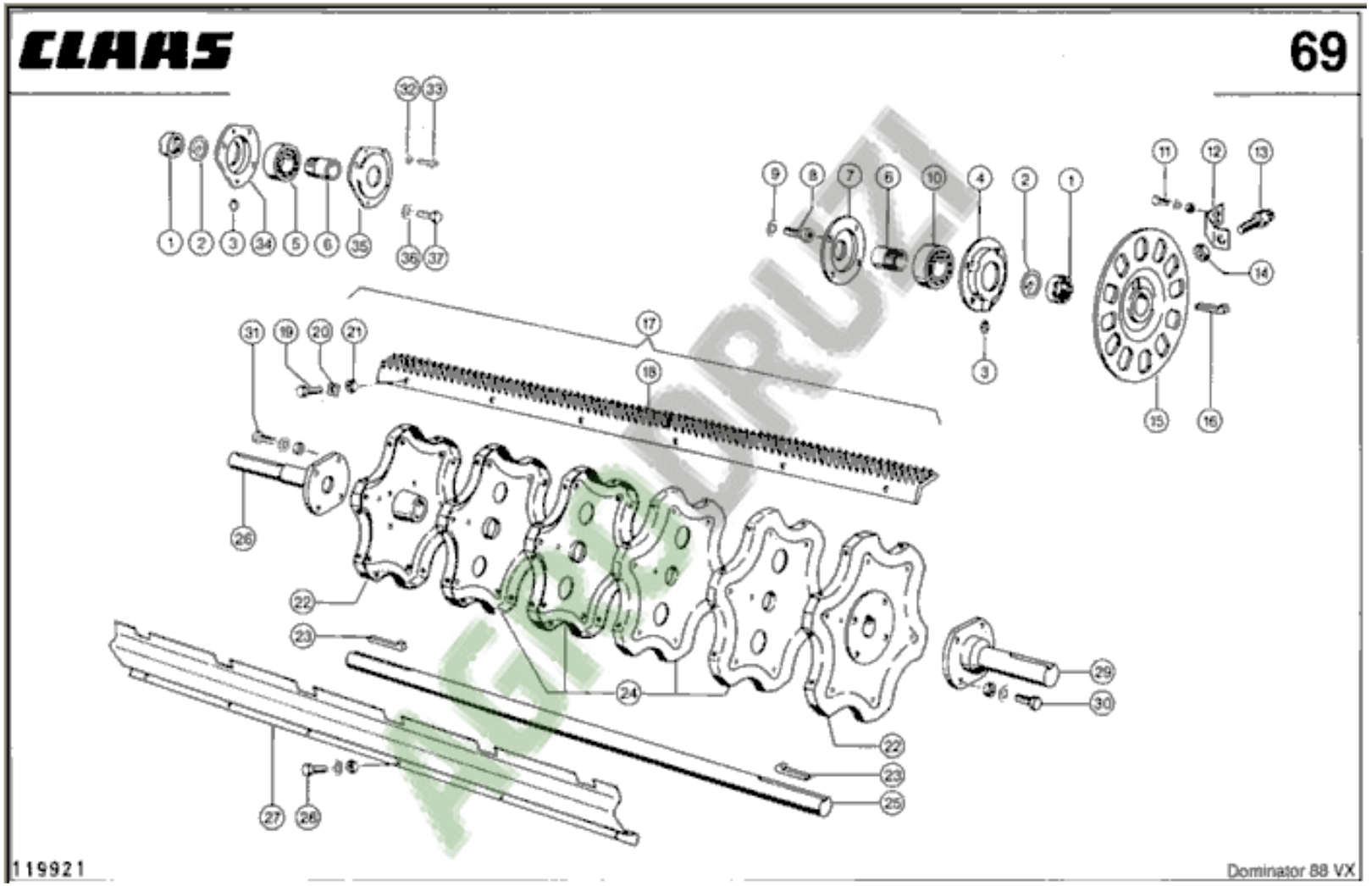
CLAAS
69
119921
Dominator 88 VX

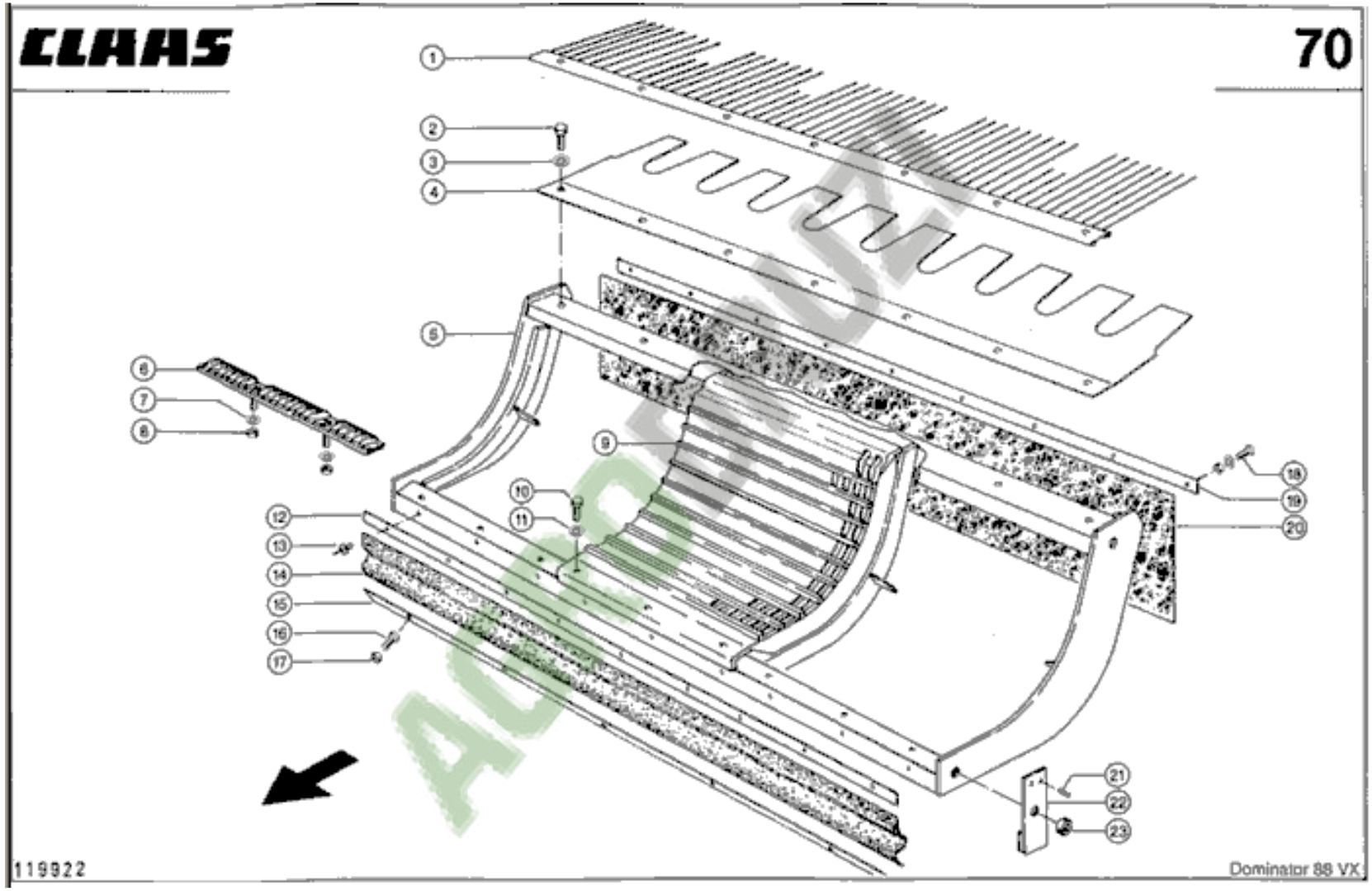
CLAAS
70
1
2
3
4
5
6
7
8
9
10
11
12
13
14
15
16
17
18
19
20
21
22
23
119922
Dominator 88 VX

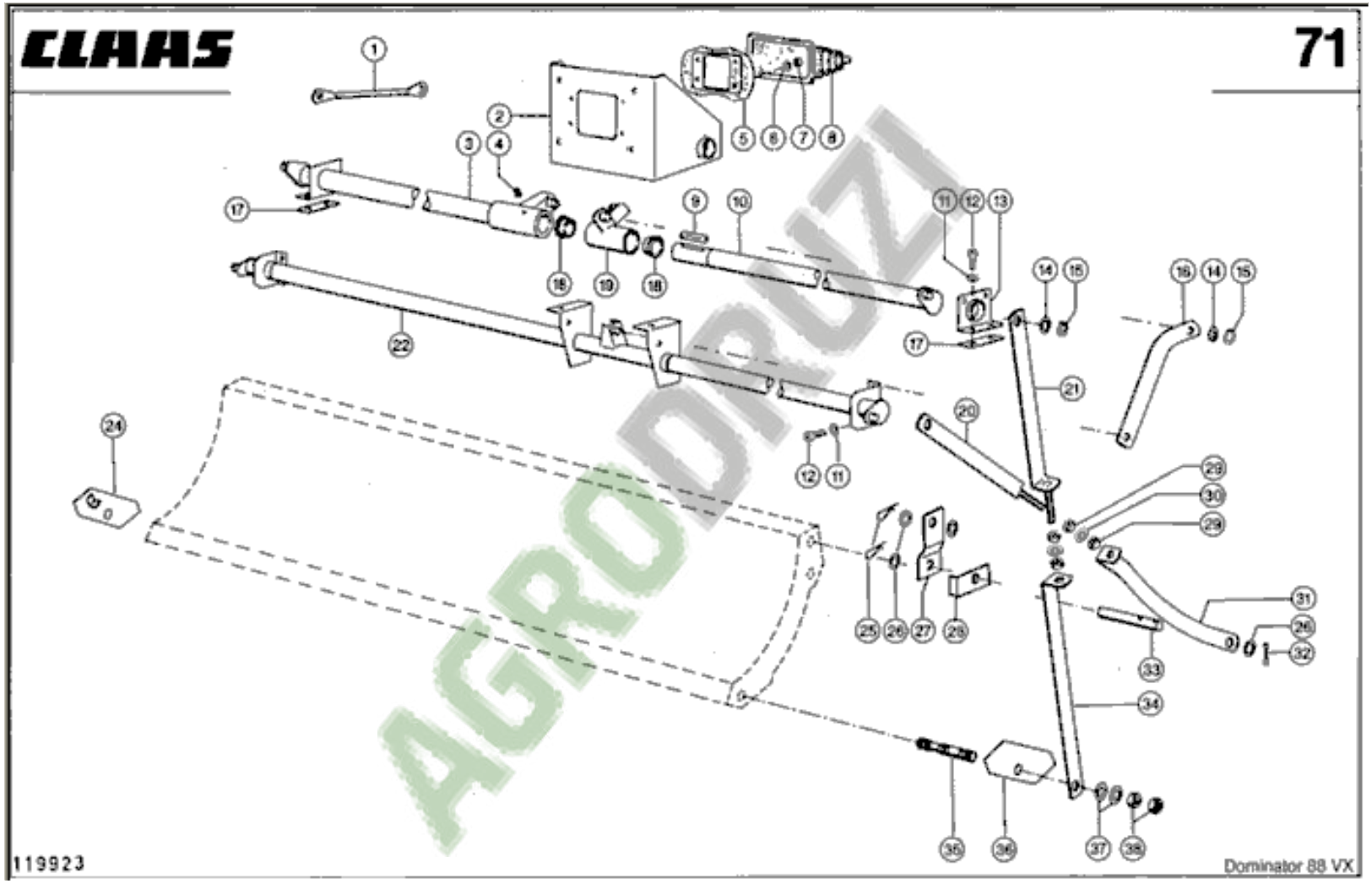


AGRODRUZI

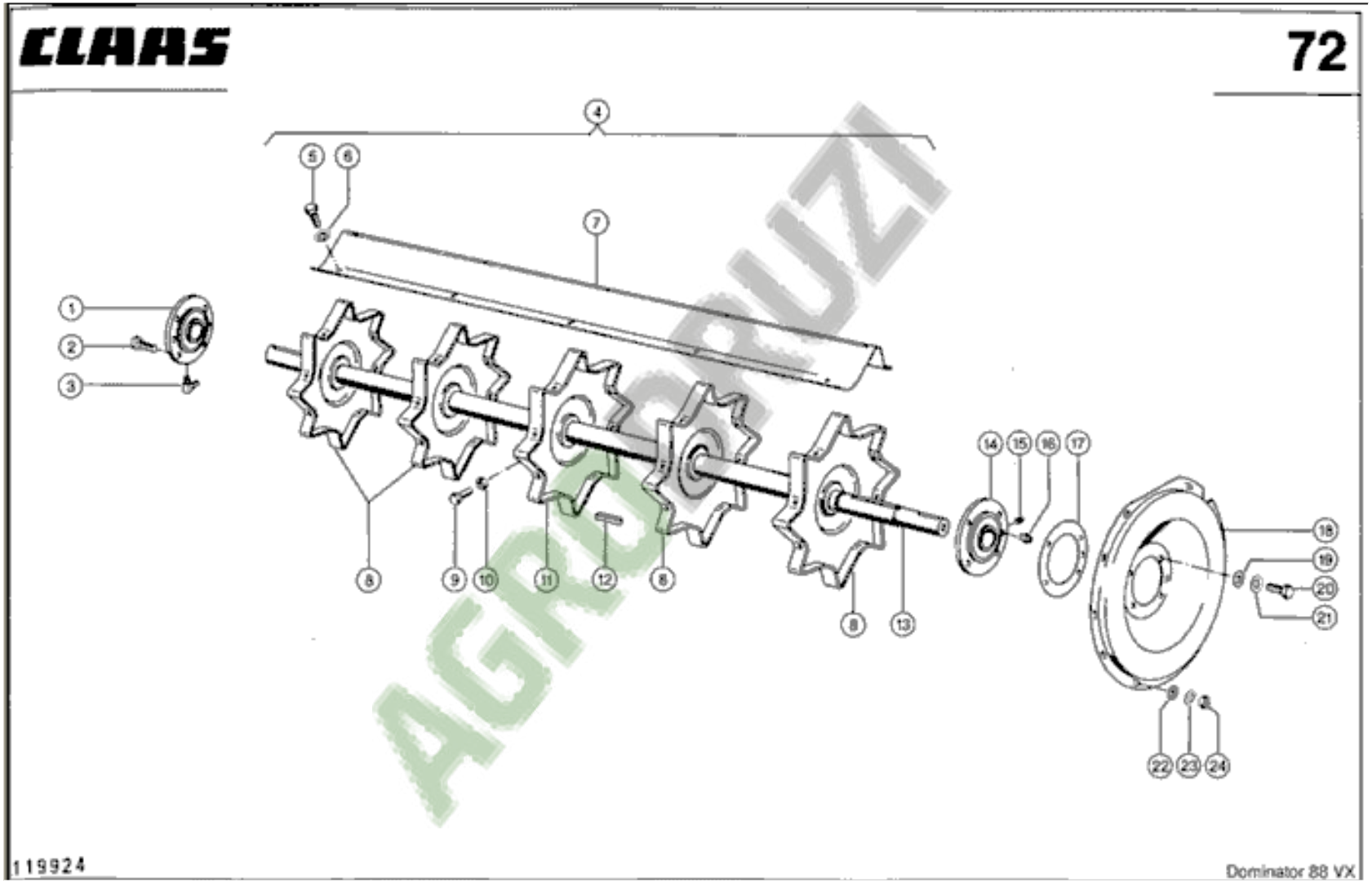
CLAAS
72
1
2
3
4
5
6
7
8
9
10
11
12
13
14
15
16
17
18
19
20
21
22
23
24
119924
Dominator 88 VX

AGROSPRUZI

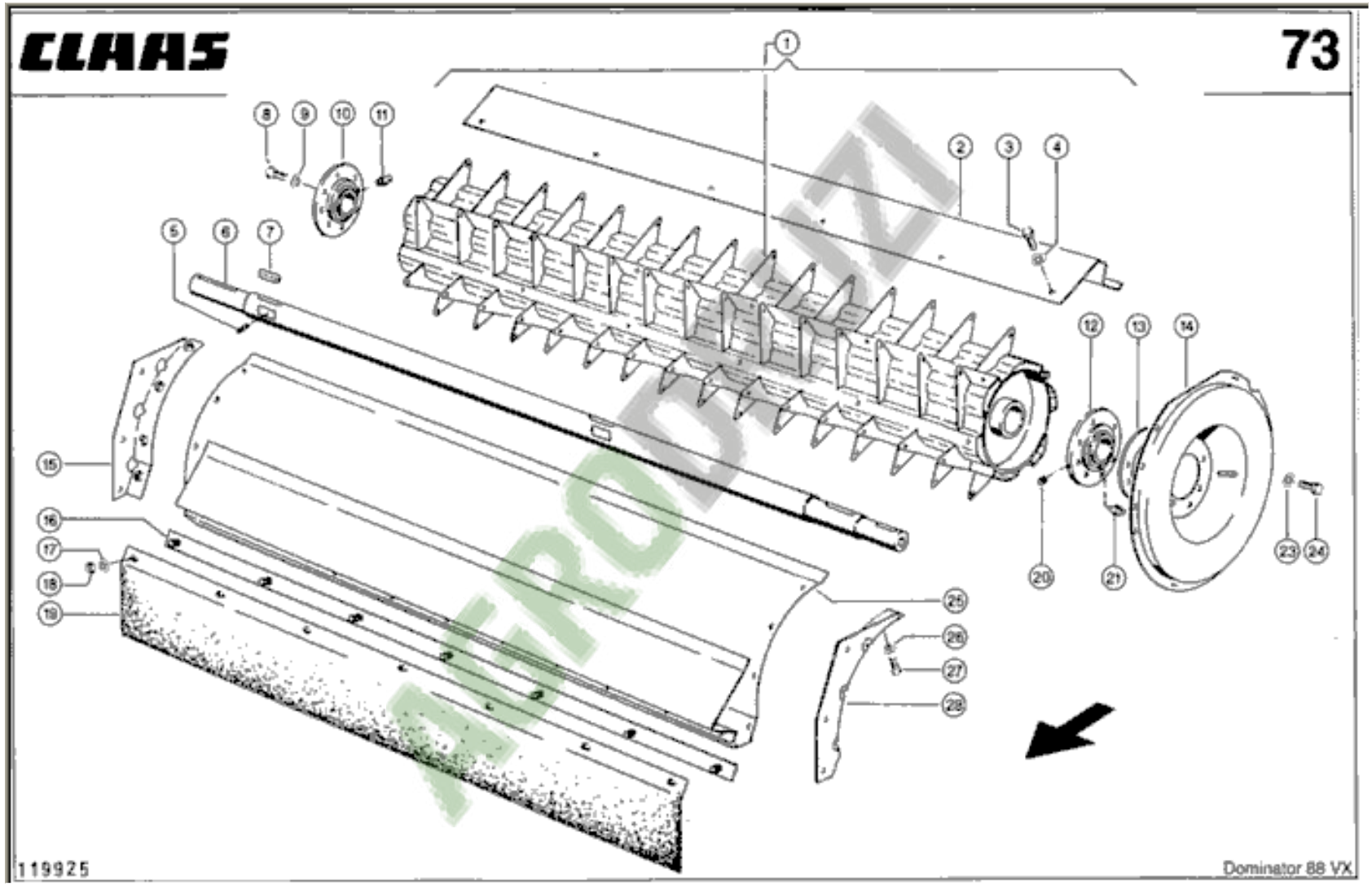
CLAAS
73
1
2
3
4
5
6
7
8
9
10
11
12
13
14
15
16
17
18
19
20
21
23
24
25
26
27
28
119925
Dominator 88 VX

# Reinigung

AGRODRUZ

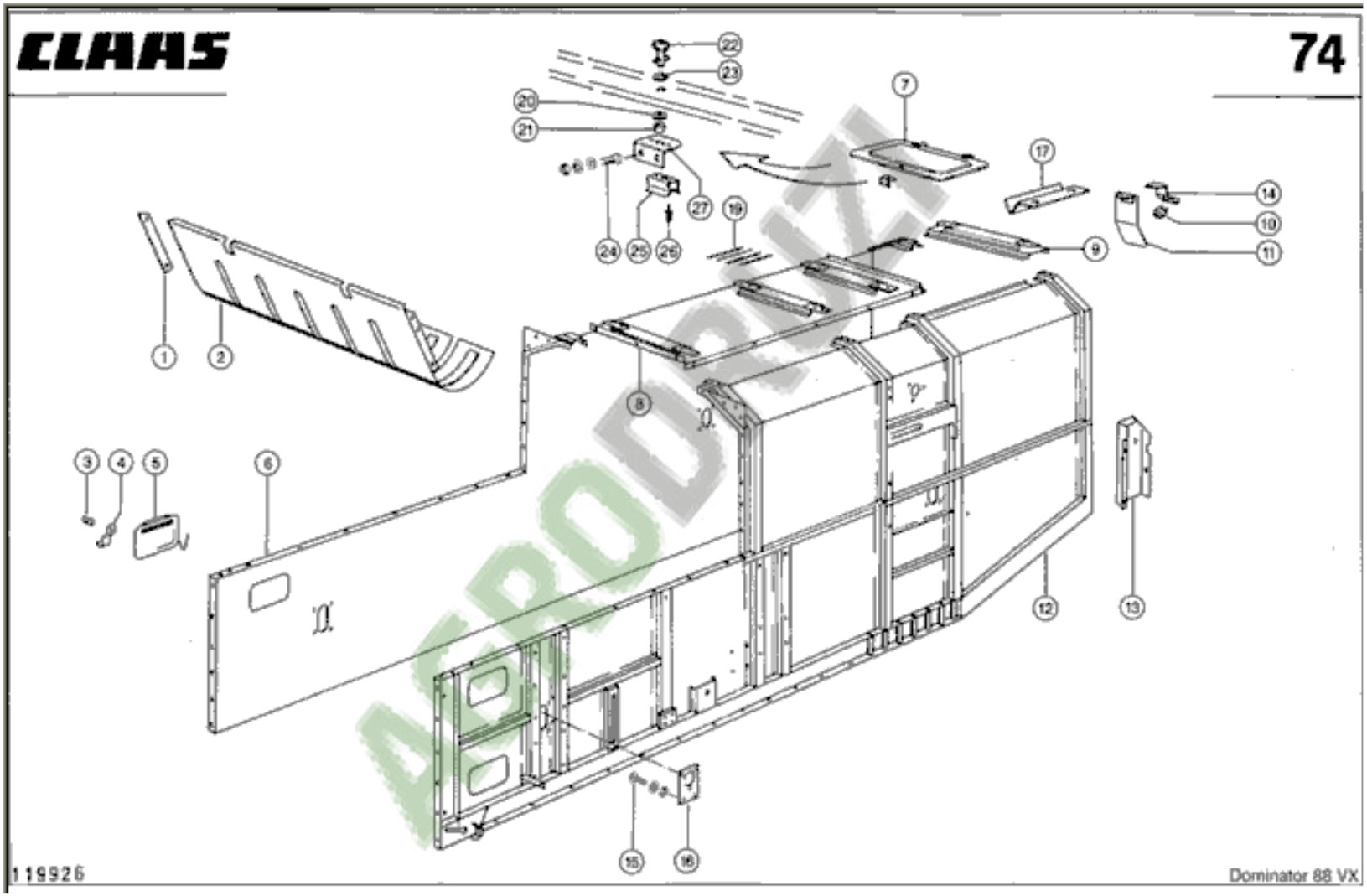
CLAAS
74
119926
Dominator 88 VX

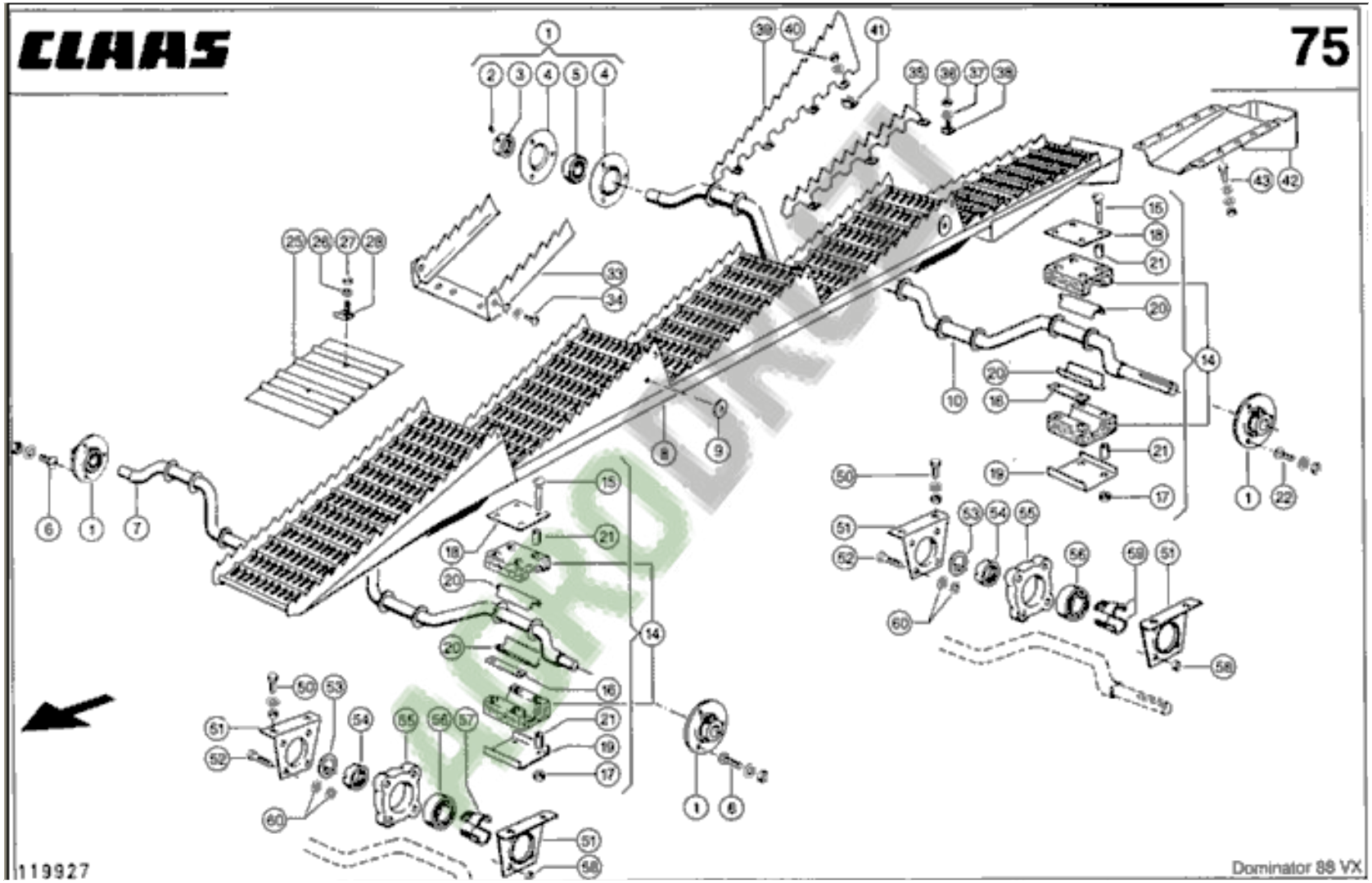
CLAAS
75
119927
Dominator 88 VX

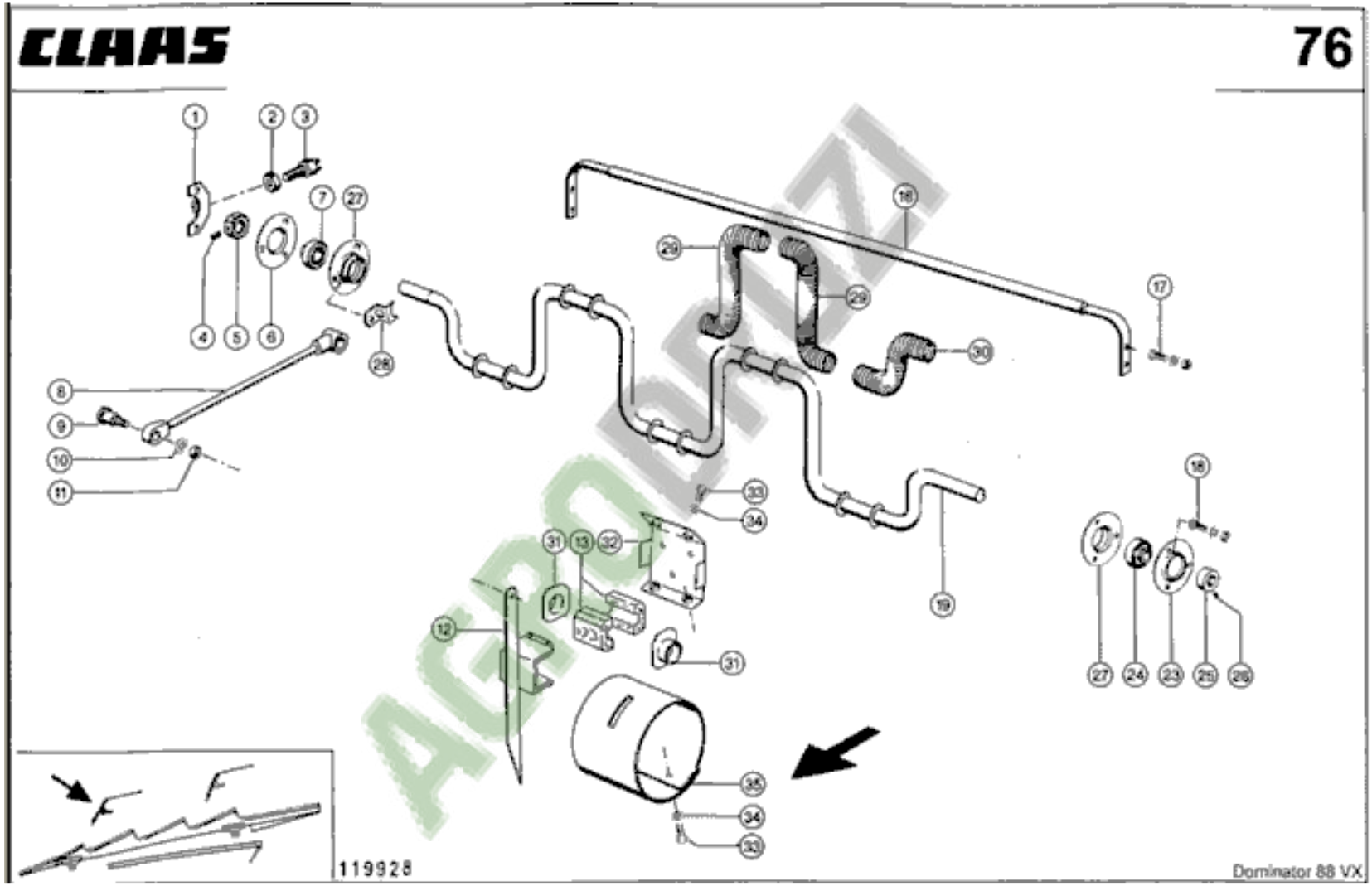
CLAAS
76
119928
Dominator 88 VX

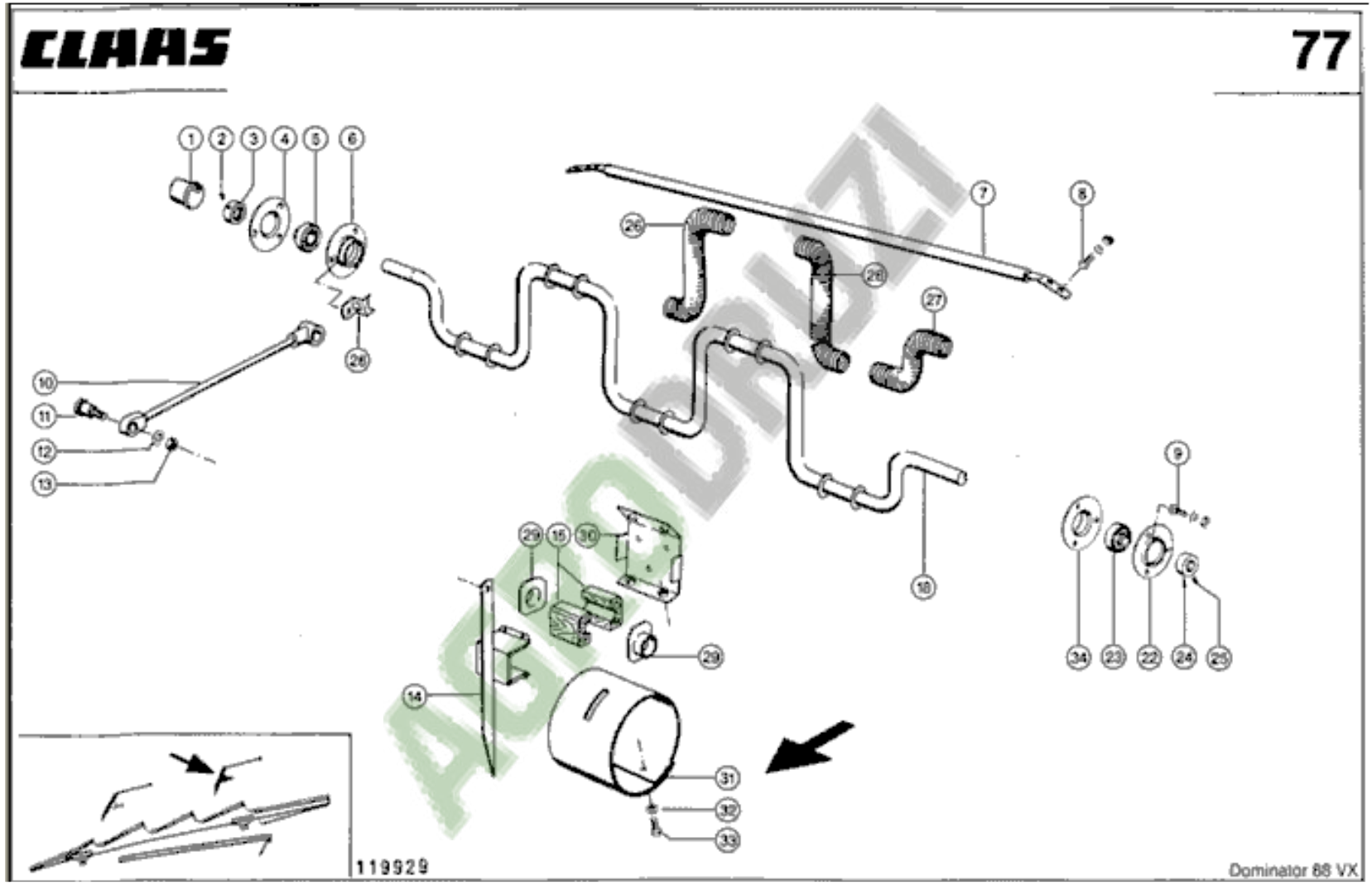
CLAAS
77
119929
Dominator 88 VX

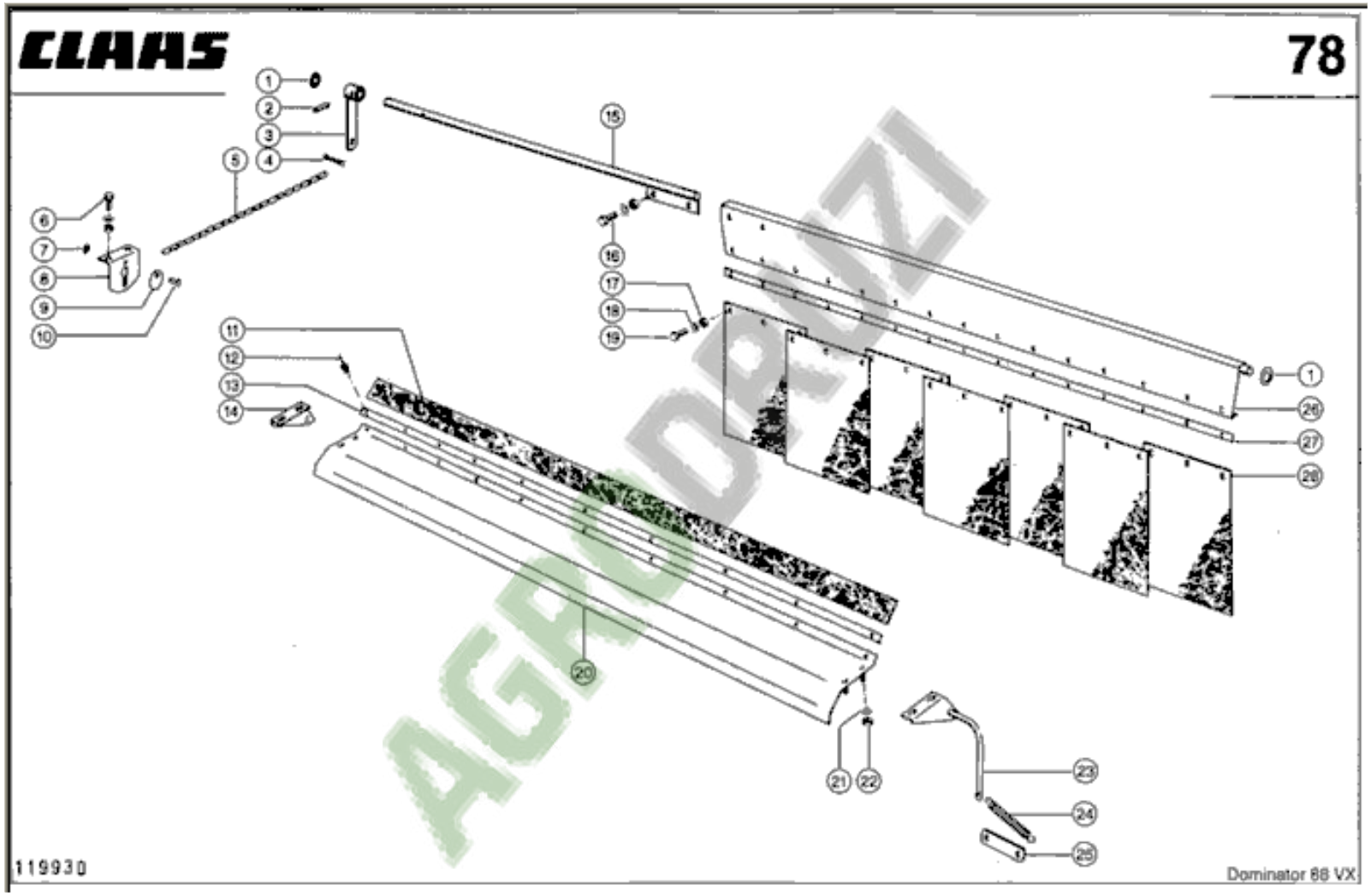
CLAAS
78
1
2
3
4
5
6
7
8
9
10
11
12
13
14
15
16
17
18
19
20
21
22
23
24
25
26
27
28
119930
Dominator 88 VX

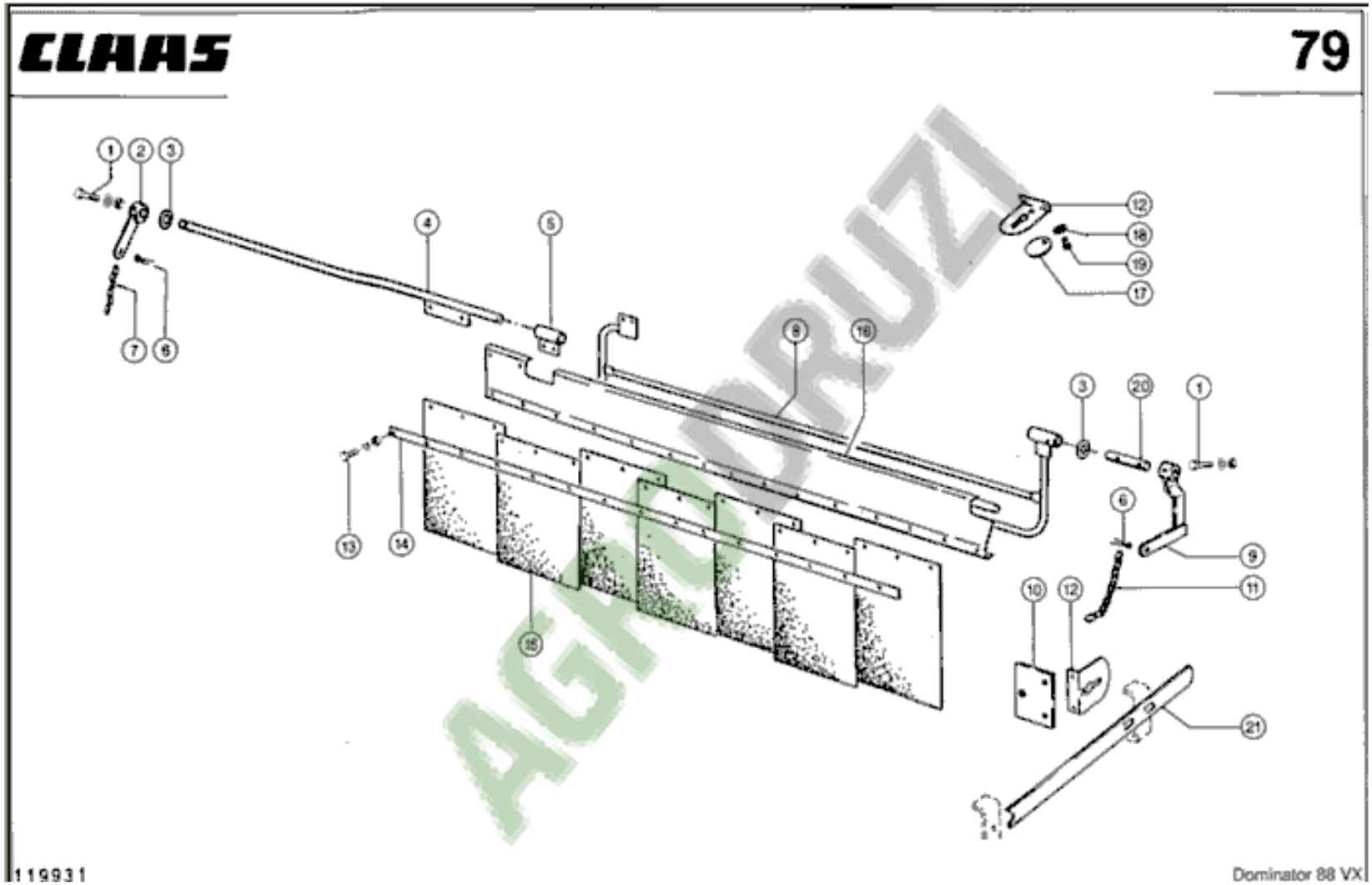
CLAAS
79
119931
Dominator 88 VX

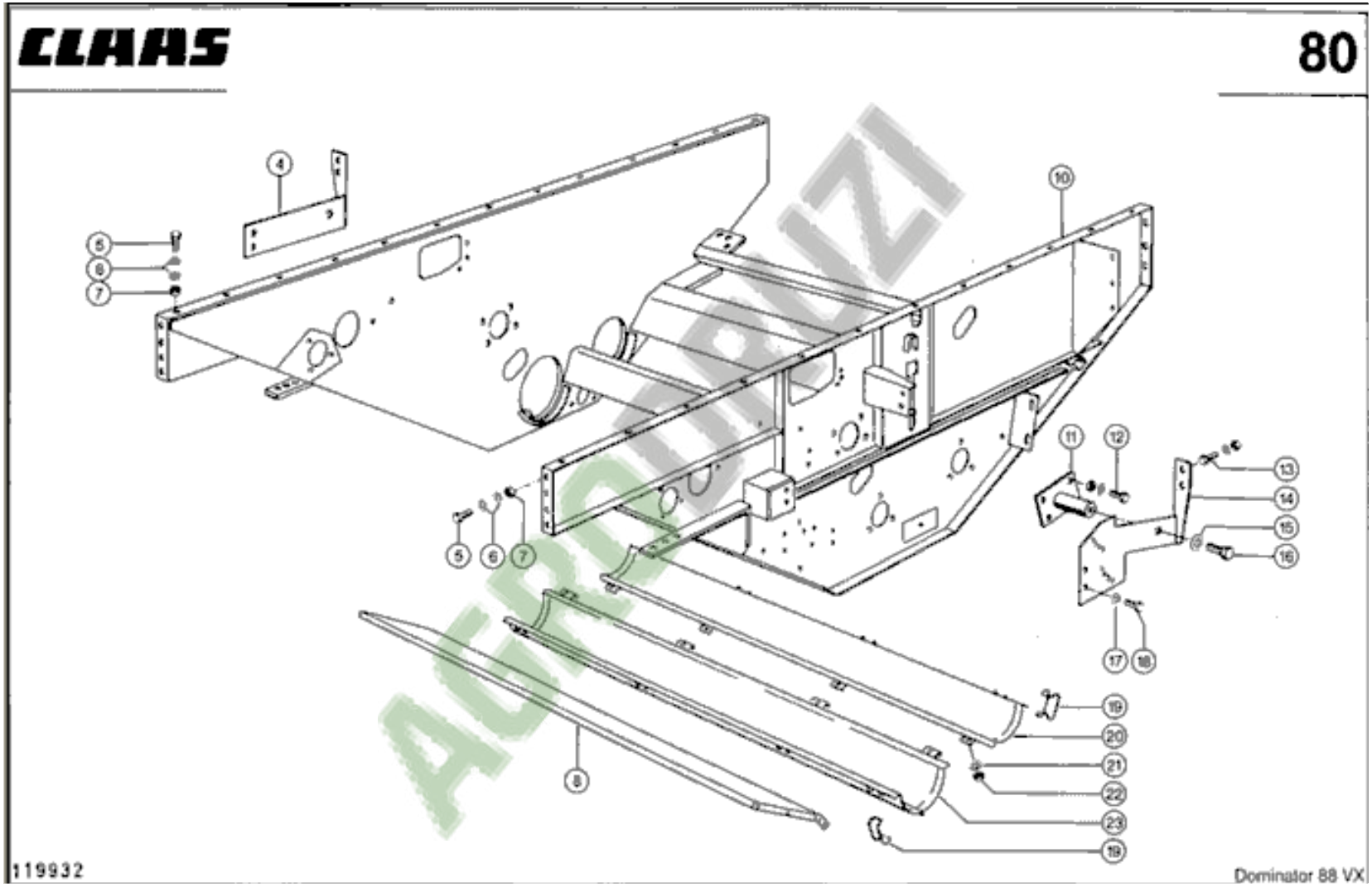
CLAAS
80
4
5
6
7
10
11
12
13
14
15
16
17
18
19
20
21
22
23
8
119932
Dominator 88 VX

AGROBUZI

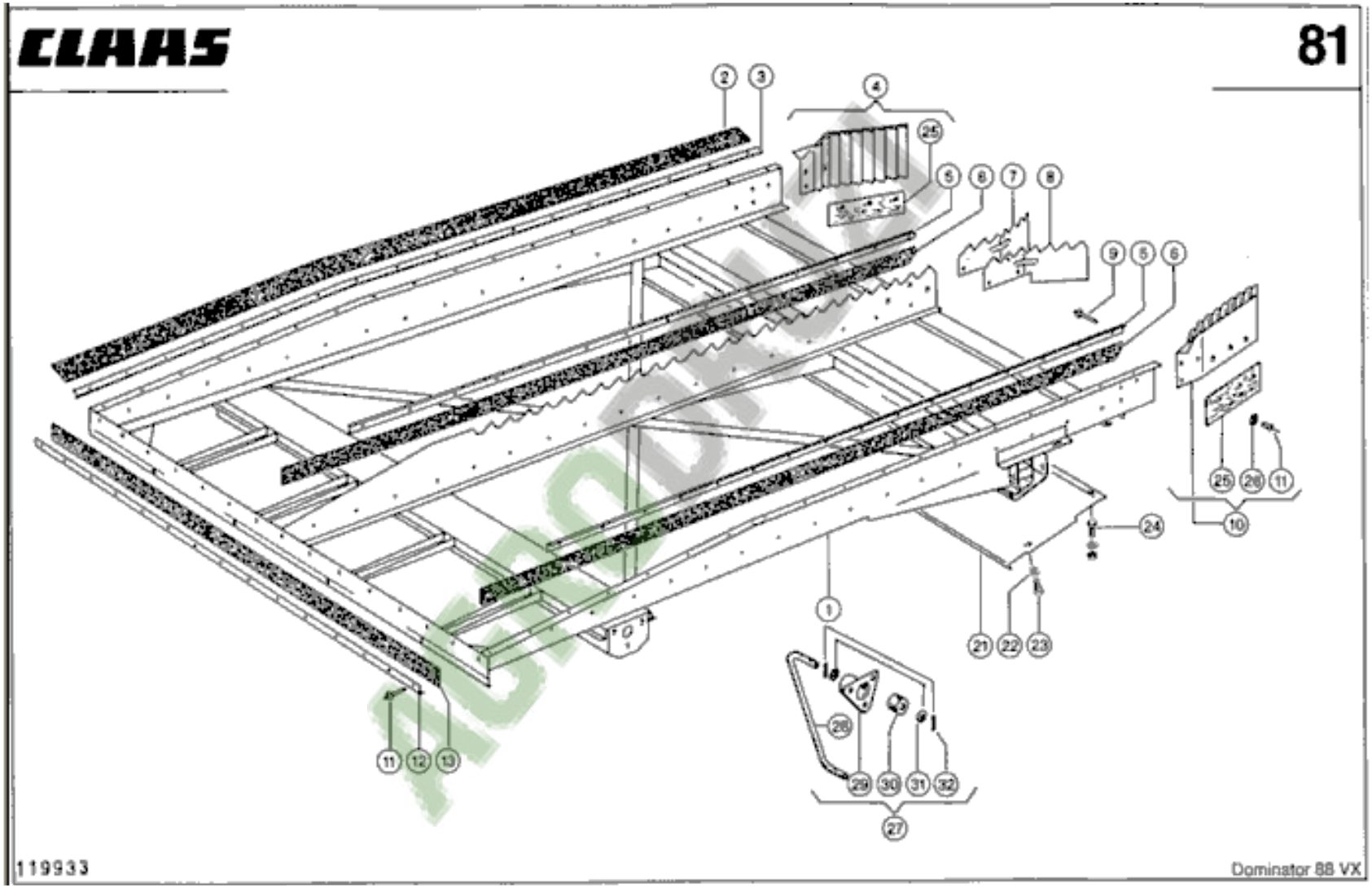
CLAAS
81
2
3
4
25
5
6
7
8
9
5
6
25
26
11
10
24
1
21
22
23
28
29
30
31
32
27
11
12
13
119933
Dominator 88 VX

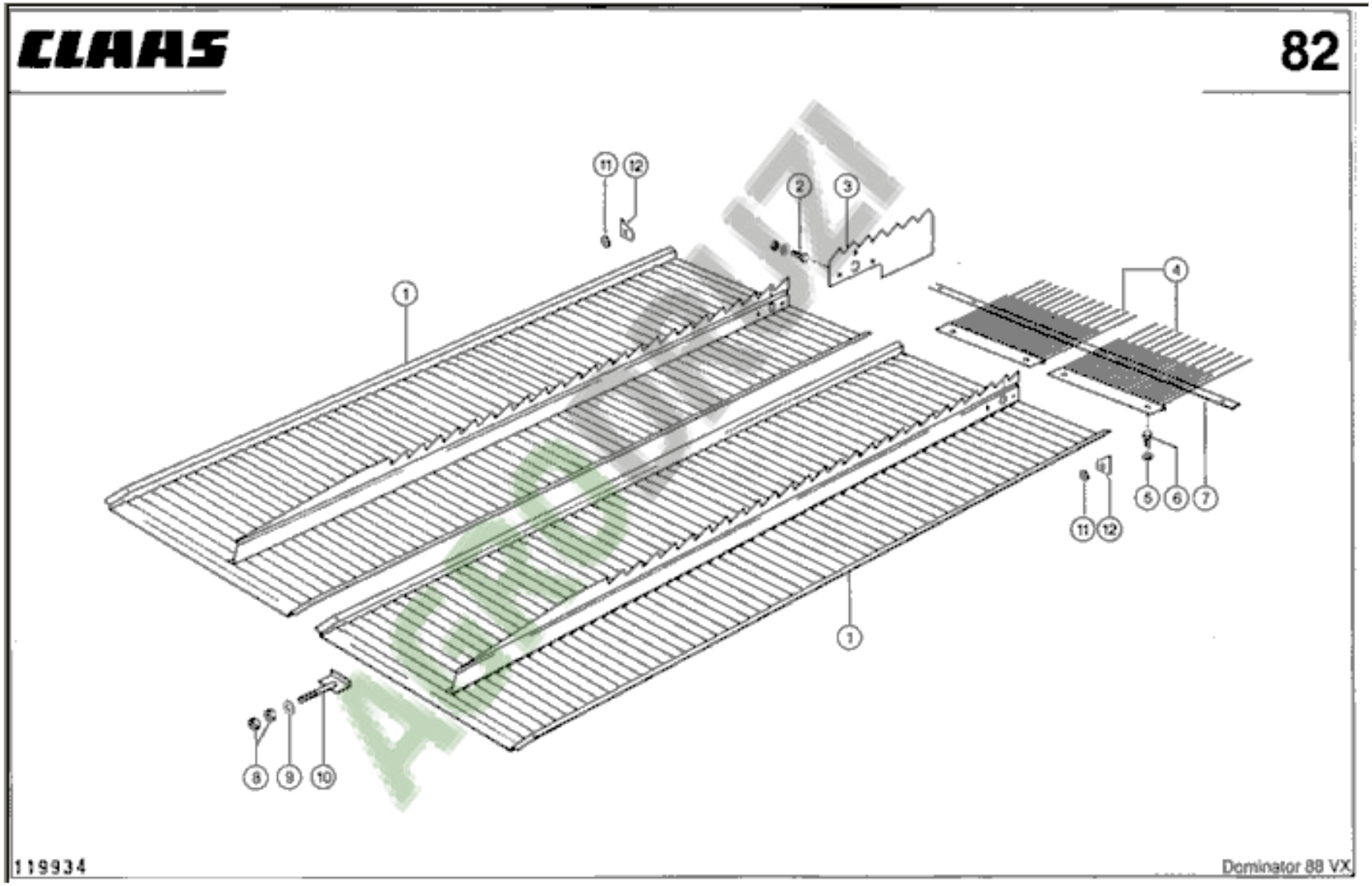
CLAAS
82
1
2
3
4
5
6
7
8
9
10
11
12
119934
Dominator 88 VX

CLAAS

83

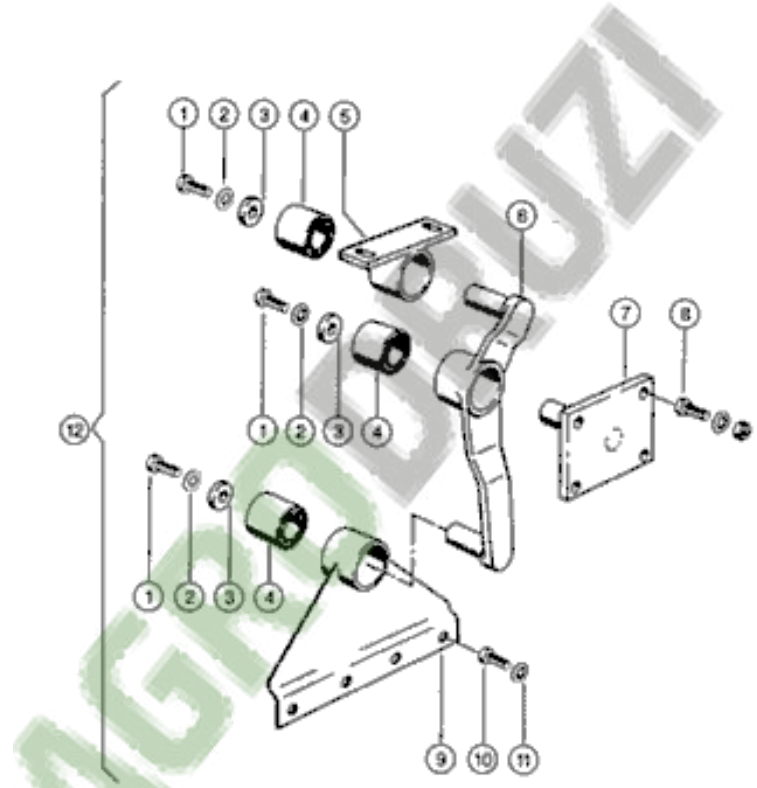


AGRODRUZI

119935

Dominator 88 VX

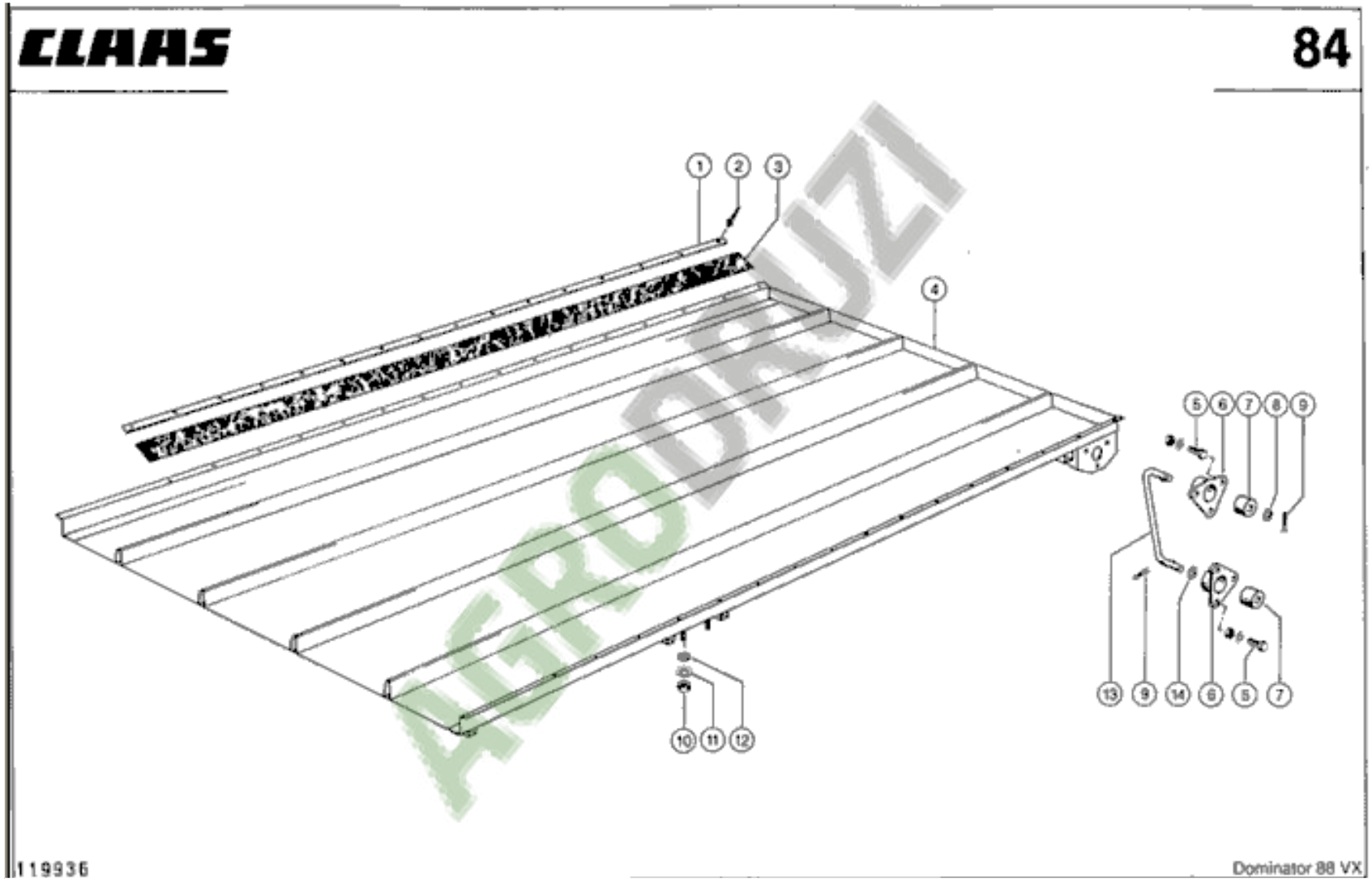


AGRODRUZI

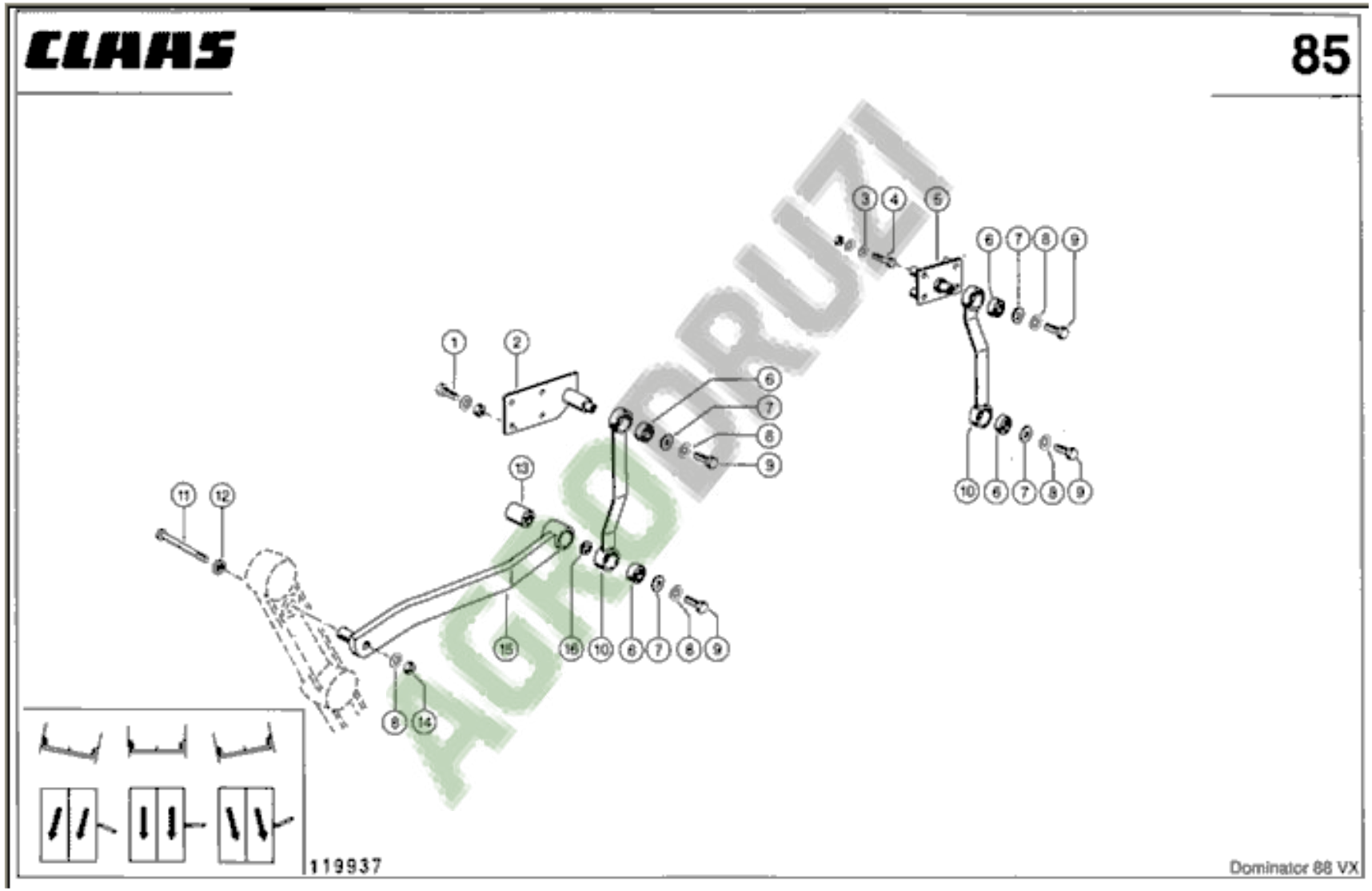
CLAAS
85
119937
Dominator 88 VX

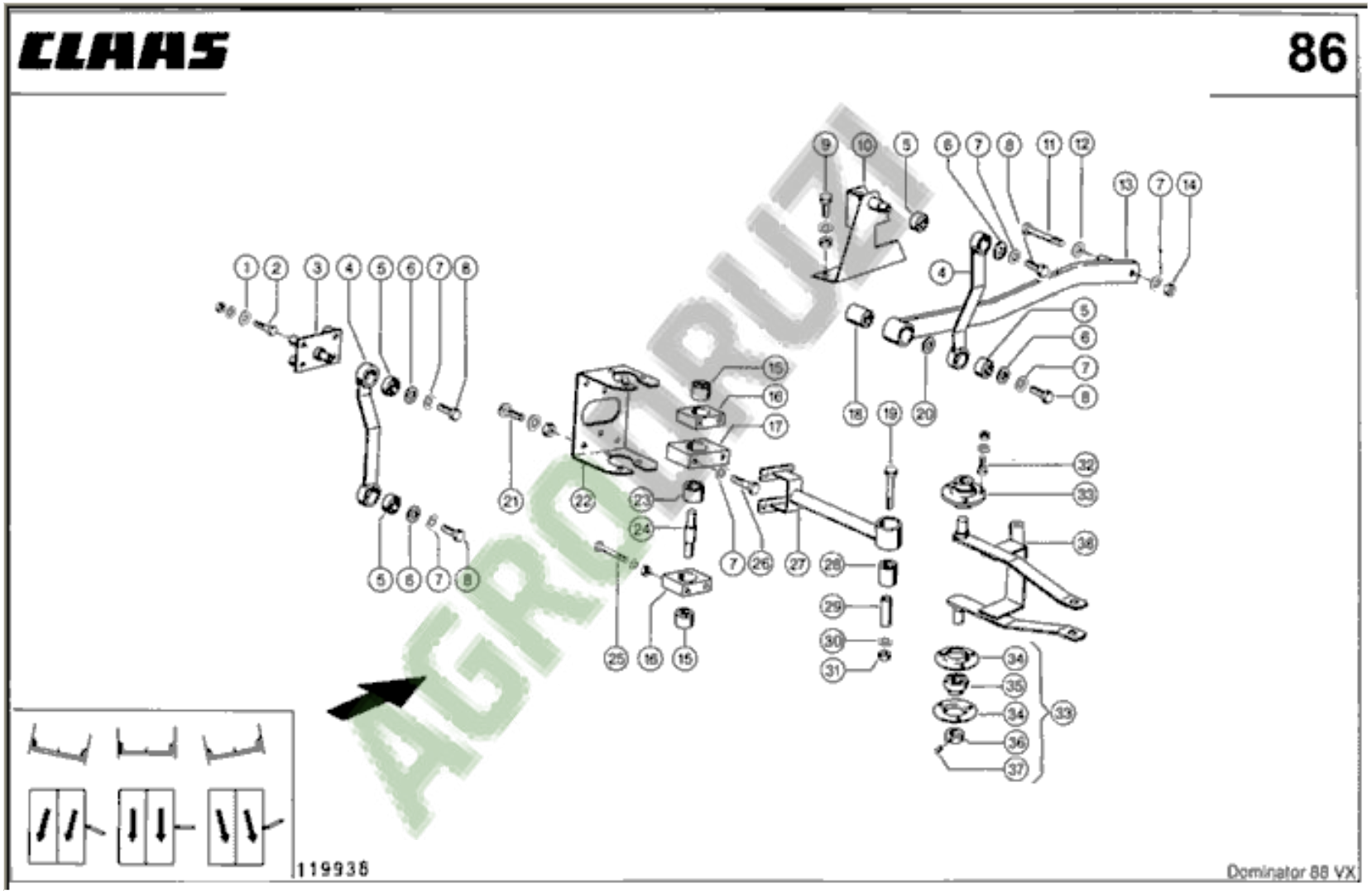
CLAAS
86
119938
Dominator 88 VX

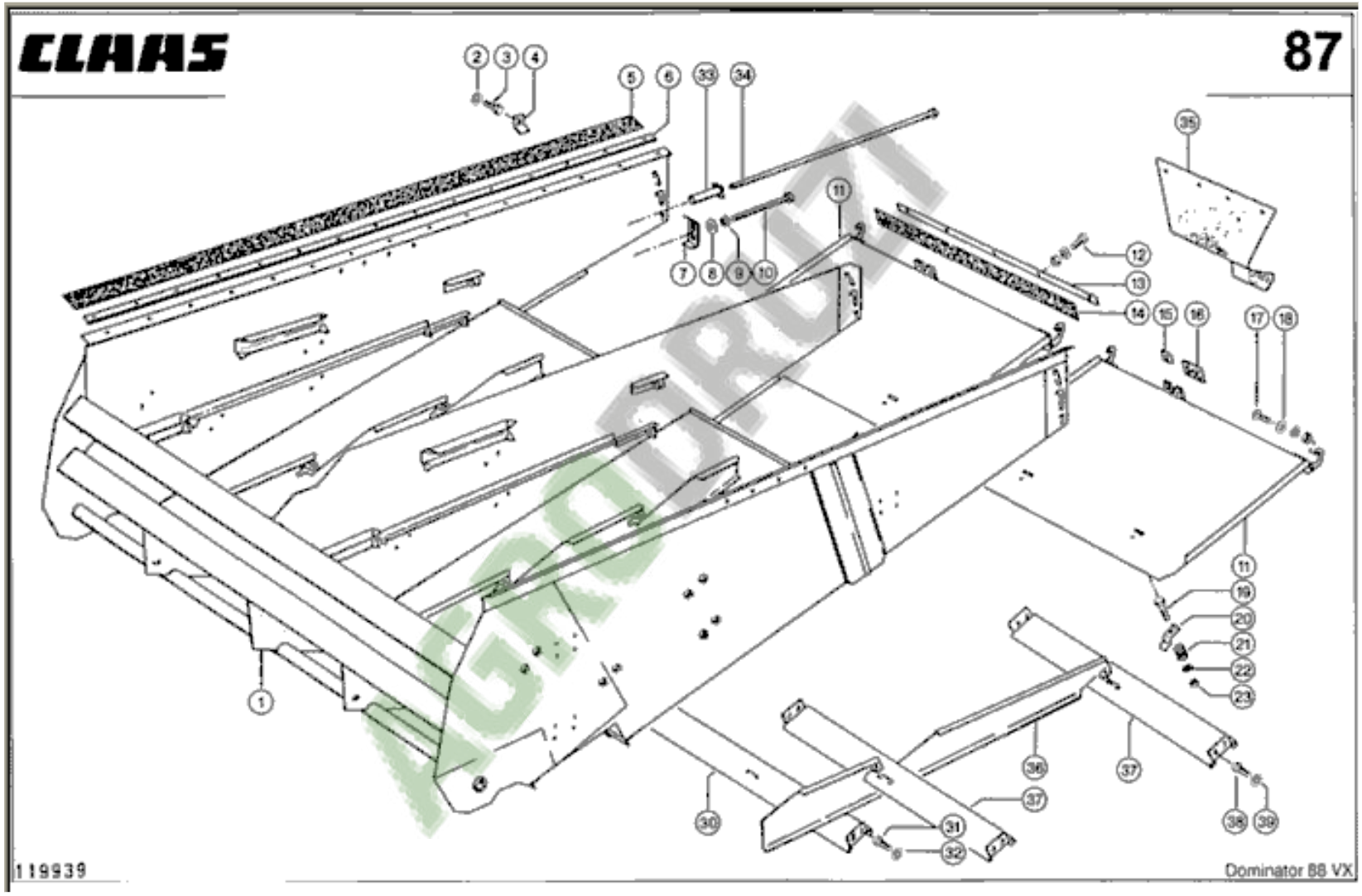
CLAAS
87
119939
Dominator 88 VX

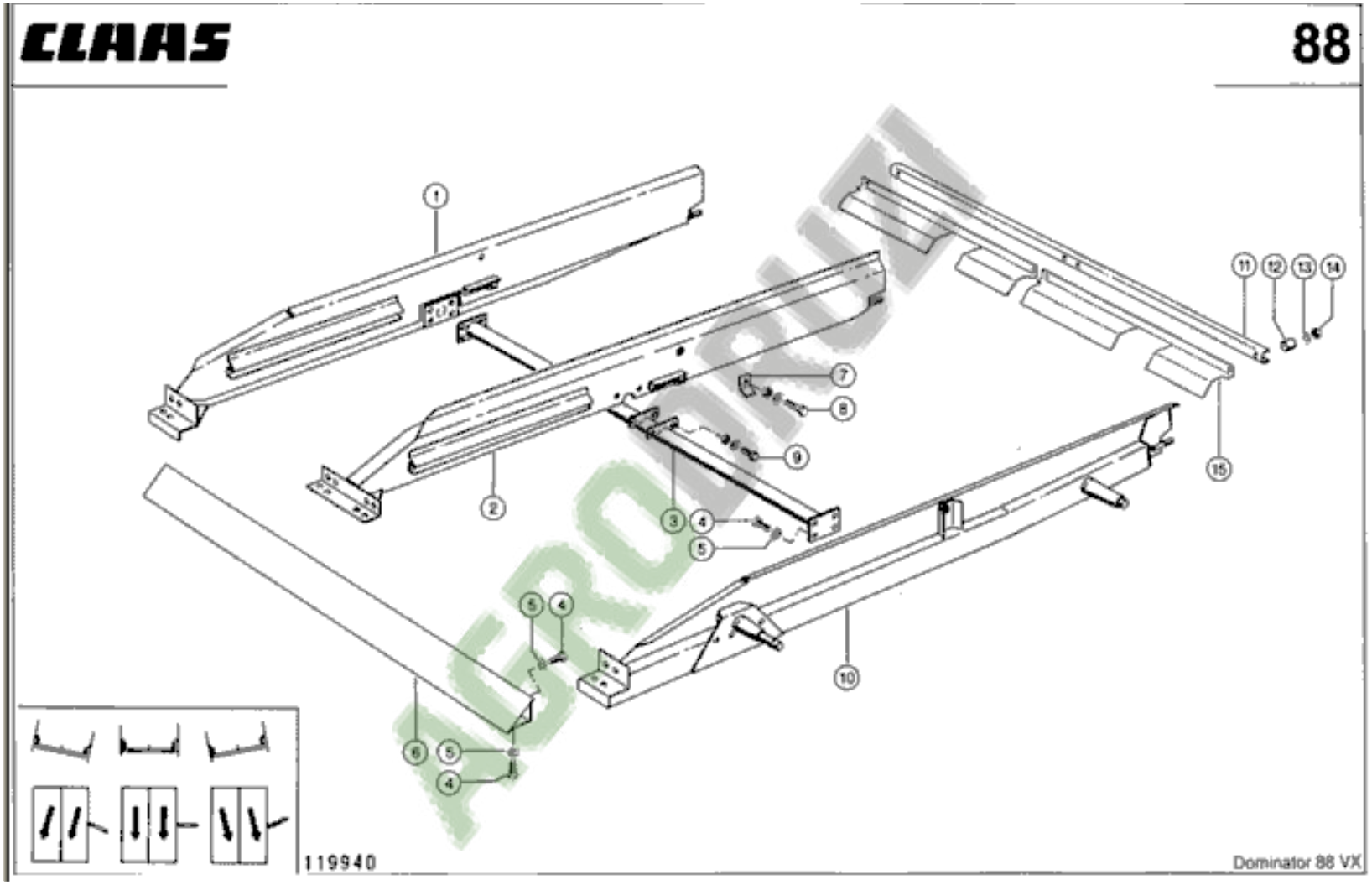
CLAAS
88
1
2
3
4
5
6
7
8
9
10
11
12
13
14
15
119940
Dominator 88 VX

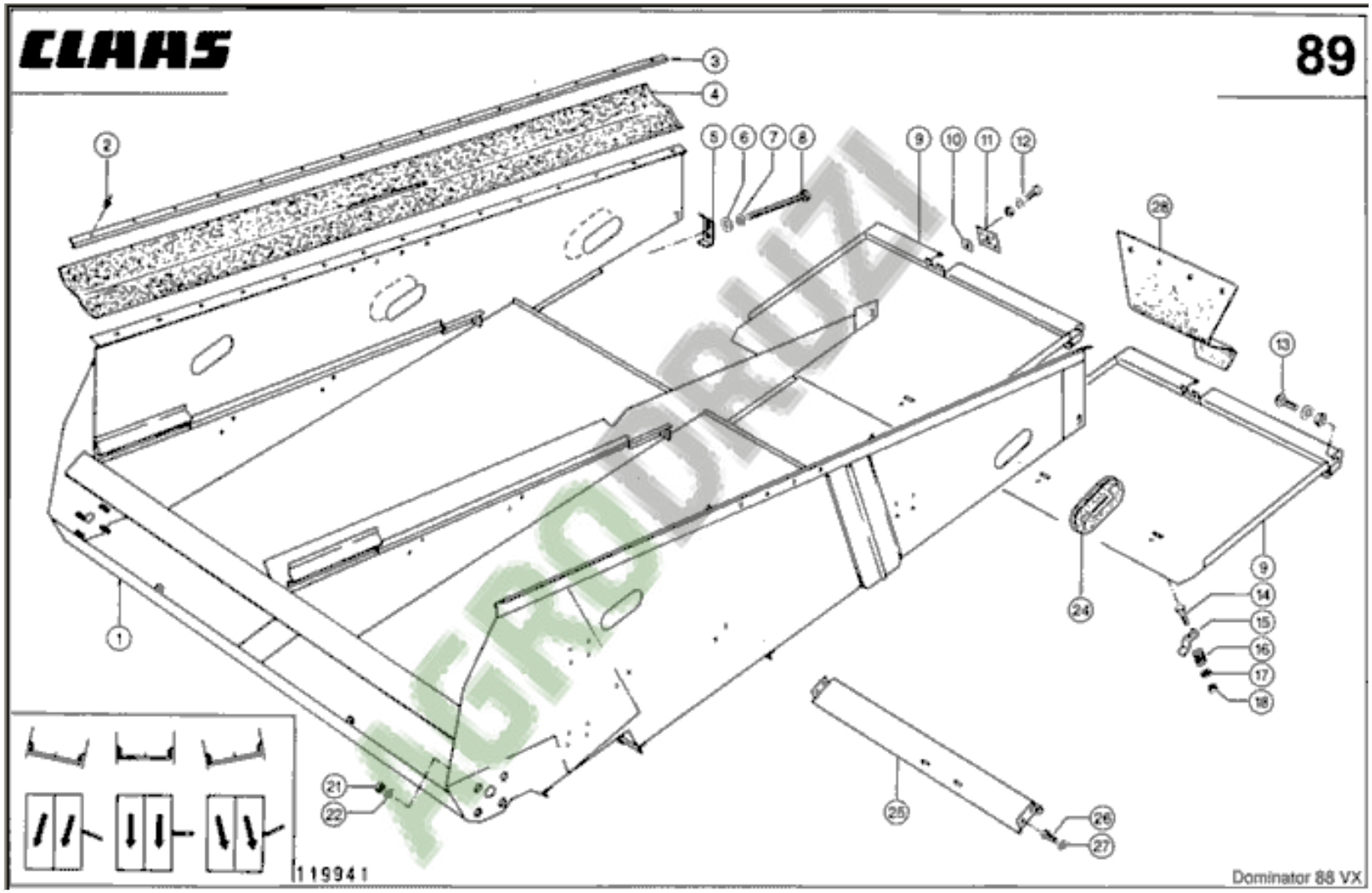
CLAAS
89
119941
Dominator 88 VX

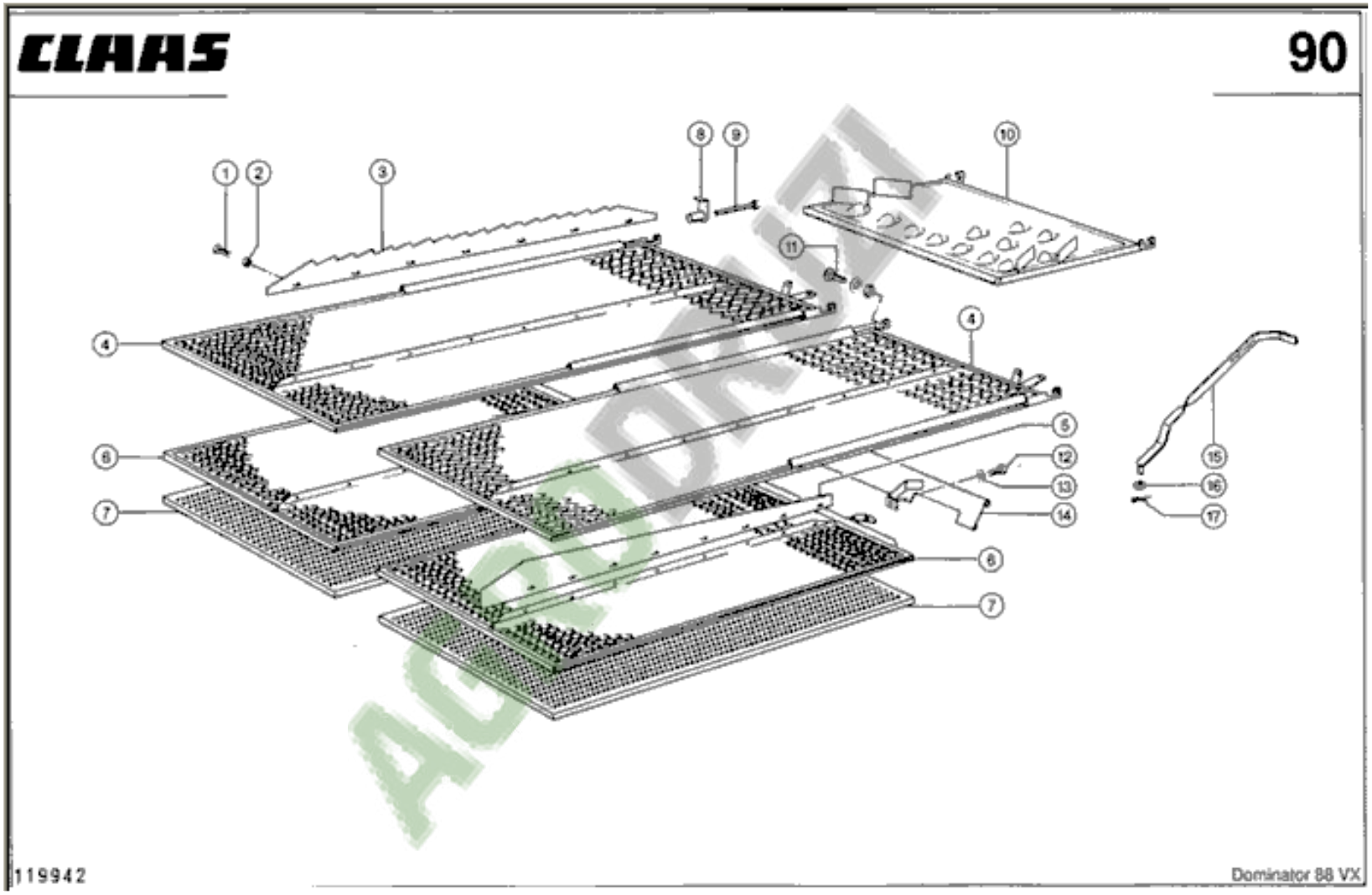
CLAAS
90
1
2
3
4
5
6
7
8
9
10
11
12
13
14
15
16
17
119942
Dominator 88 VX

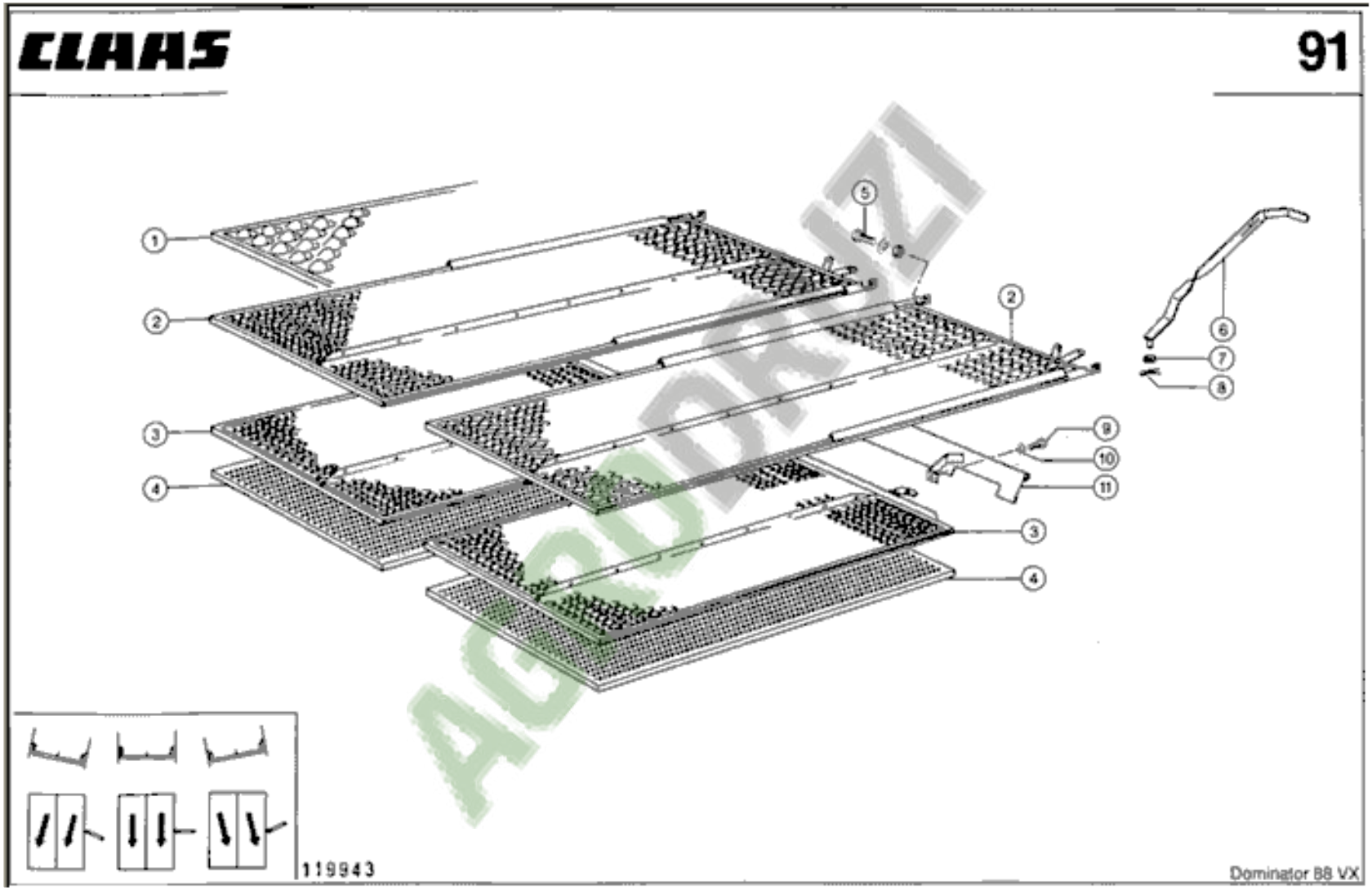
CLAAS
91
1
2
3
4
5
6
7
8
9
10
11
119943
Dominator 88 VX

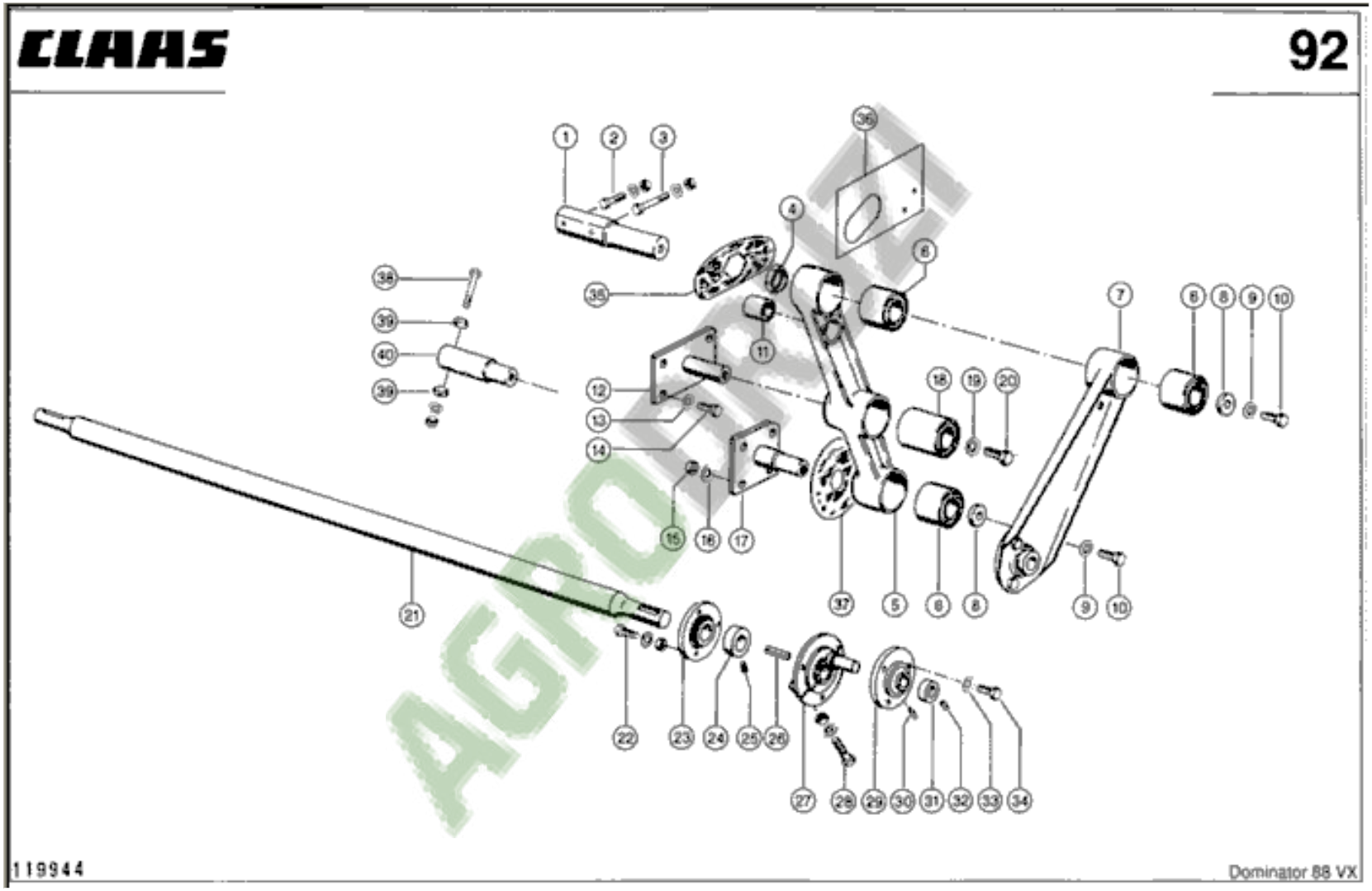
CLAAS
92
119944
Dominator 88 VX

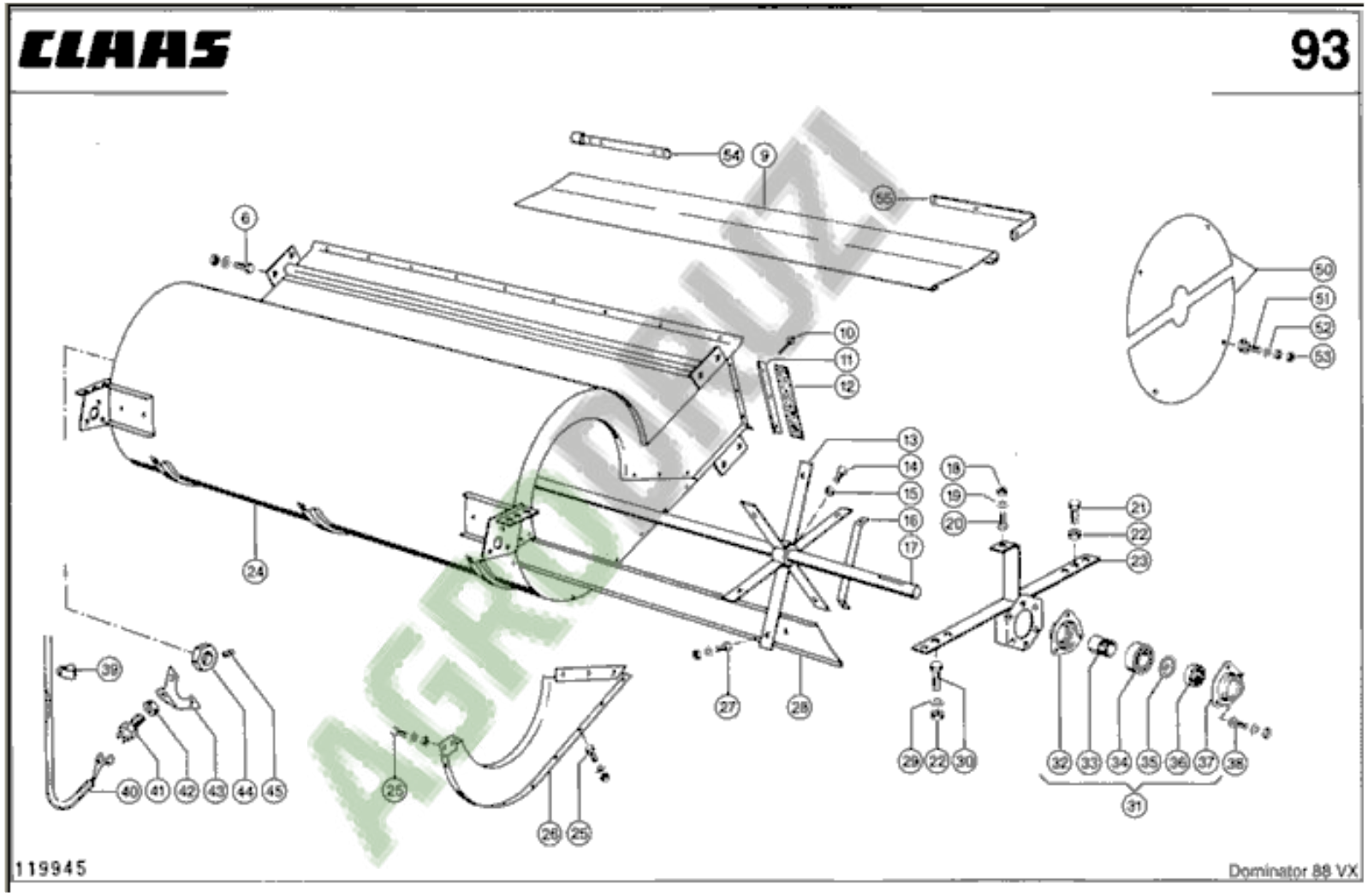
CLAAS
93
119945
Dominator 88 VX

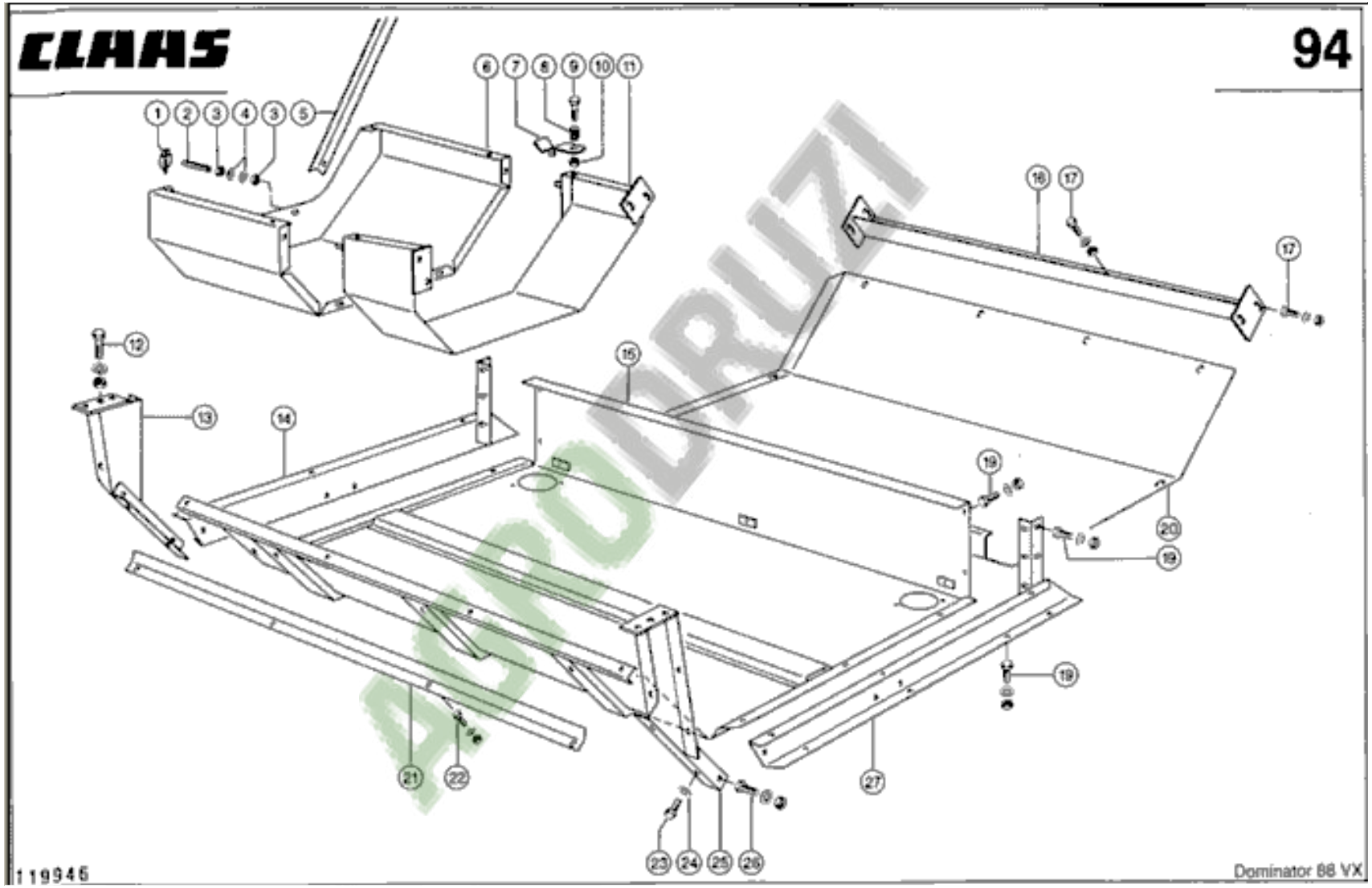
CLAAS
94
119946
Dominator 88 VX

# Kornförderung

AGRODRUZI

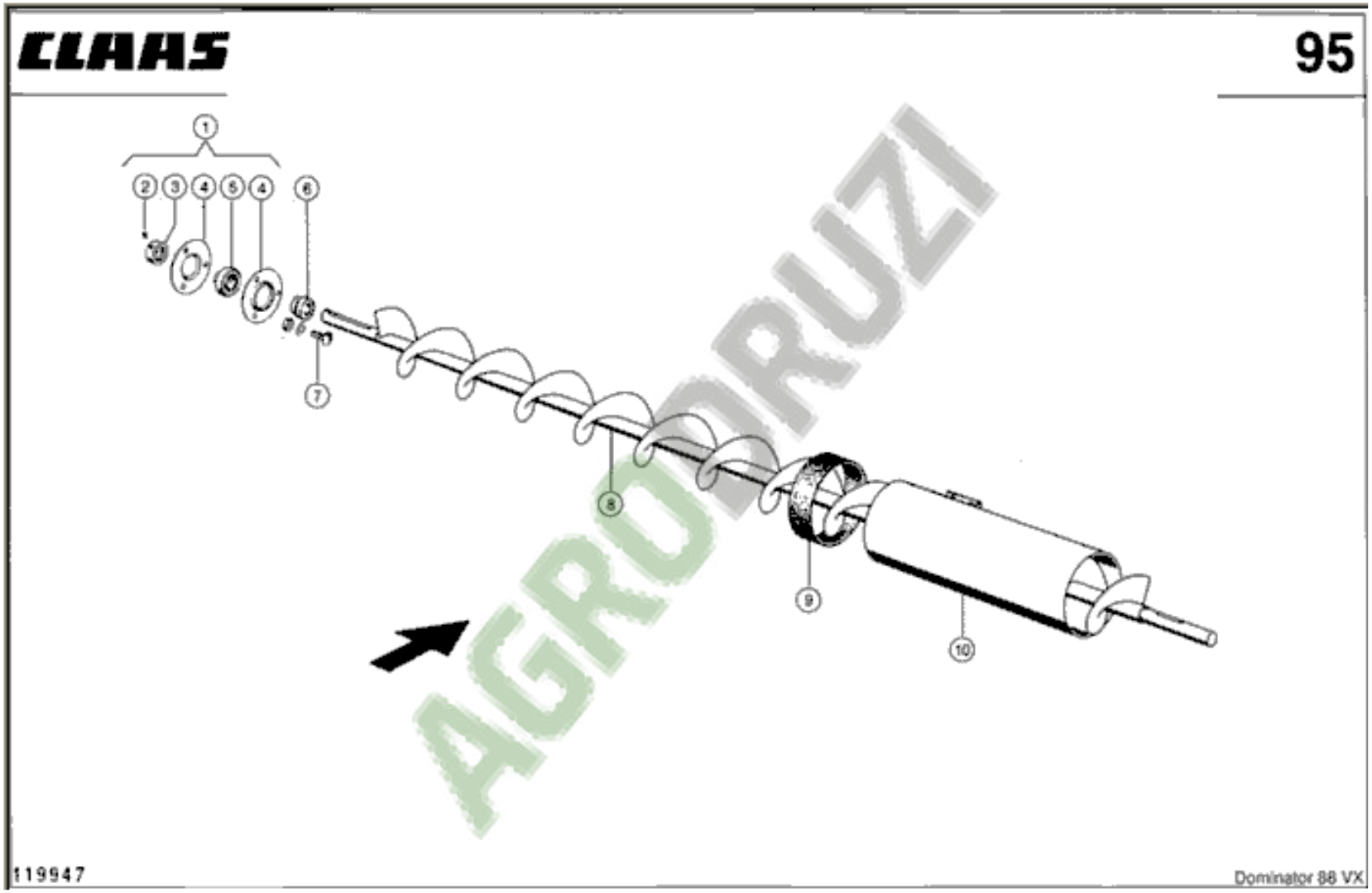


AGRODRUZI

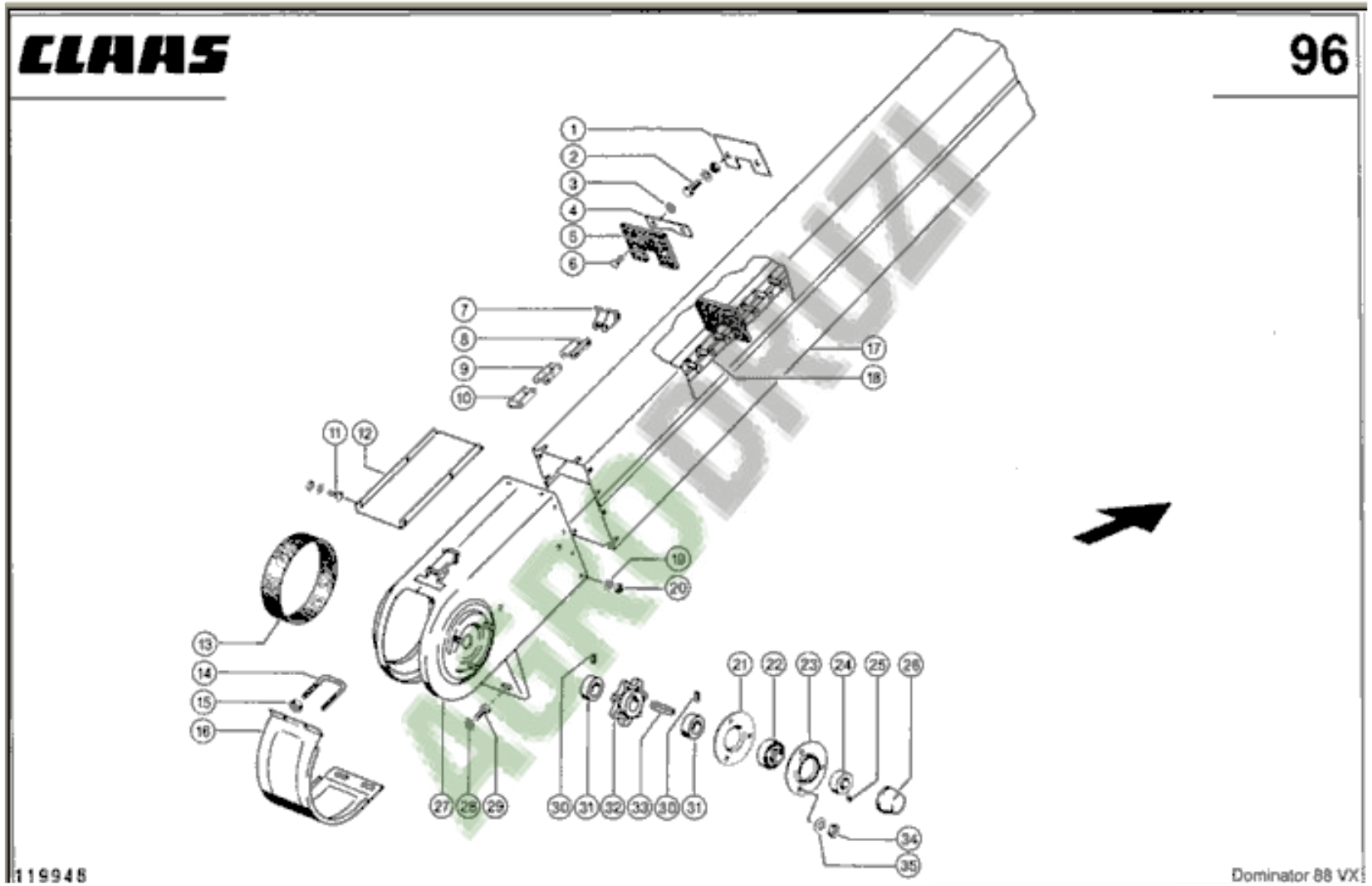
CLAAS
96
1
2
3
4
5
6
7
8
9
10
11
12
13
14
15
16
17
18
19
20
21
22
23
24
25
26
27
28
29
30
31
32
33
30
31
34
35
119948
Dominator 88 VX

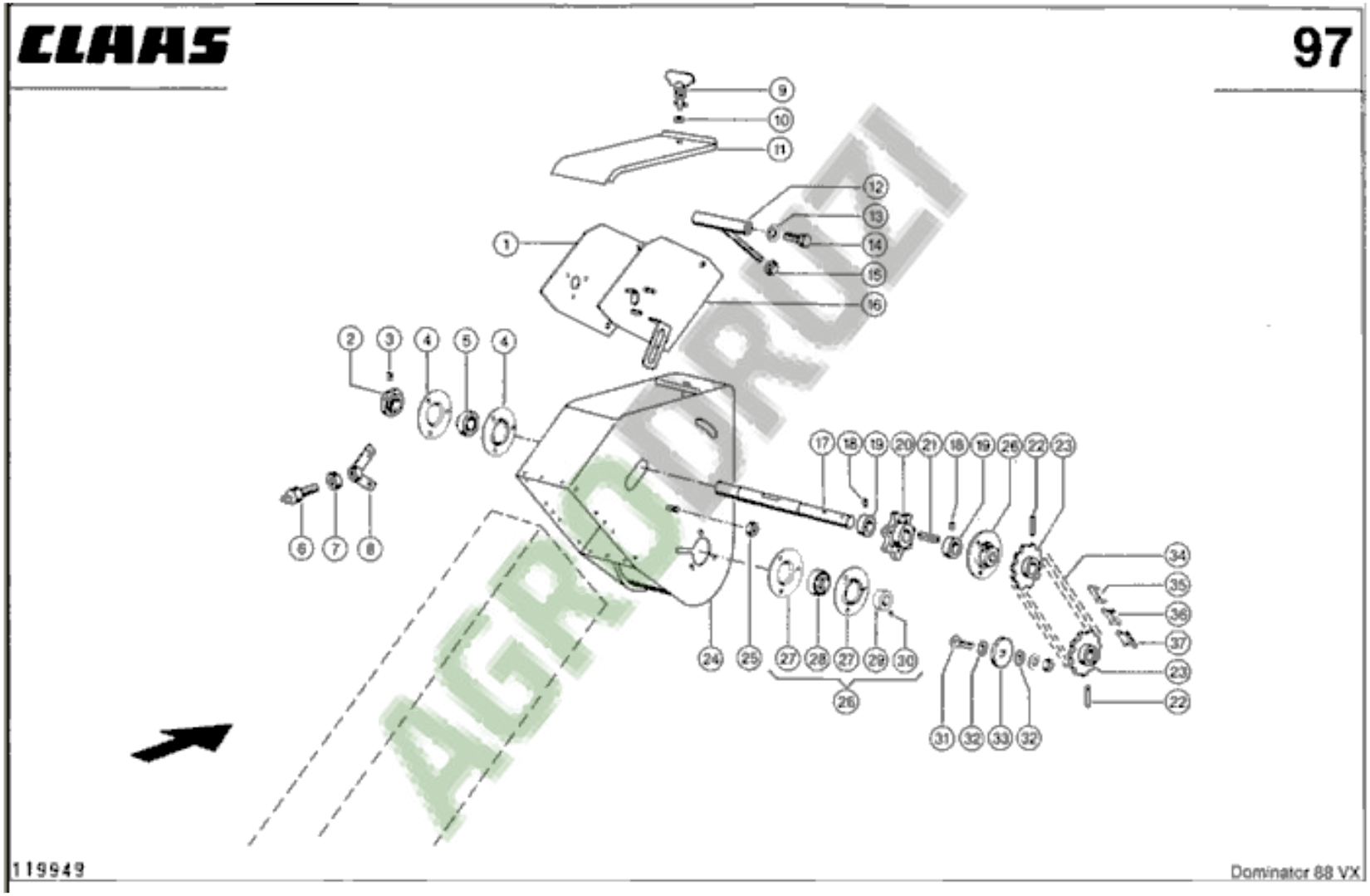
CLAAS
97
119949
Dominator 88 VX

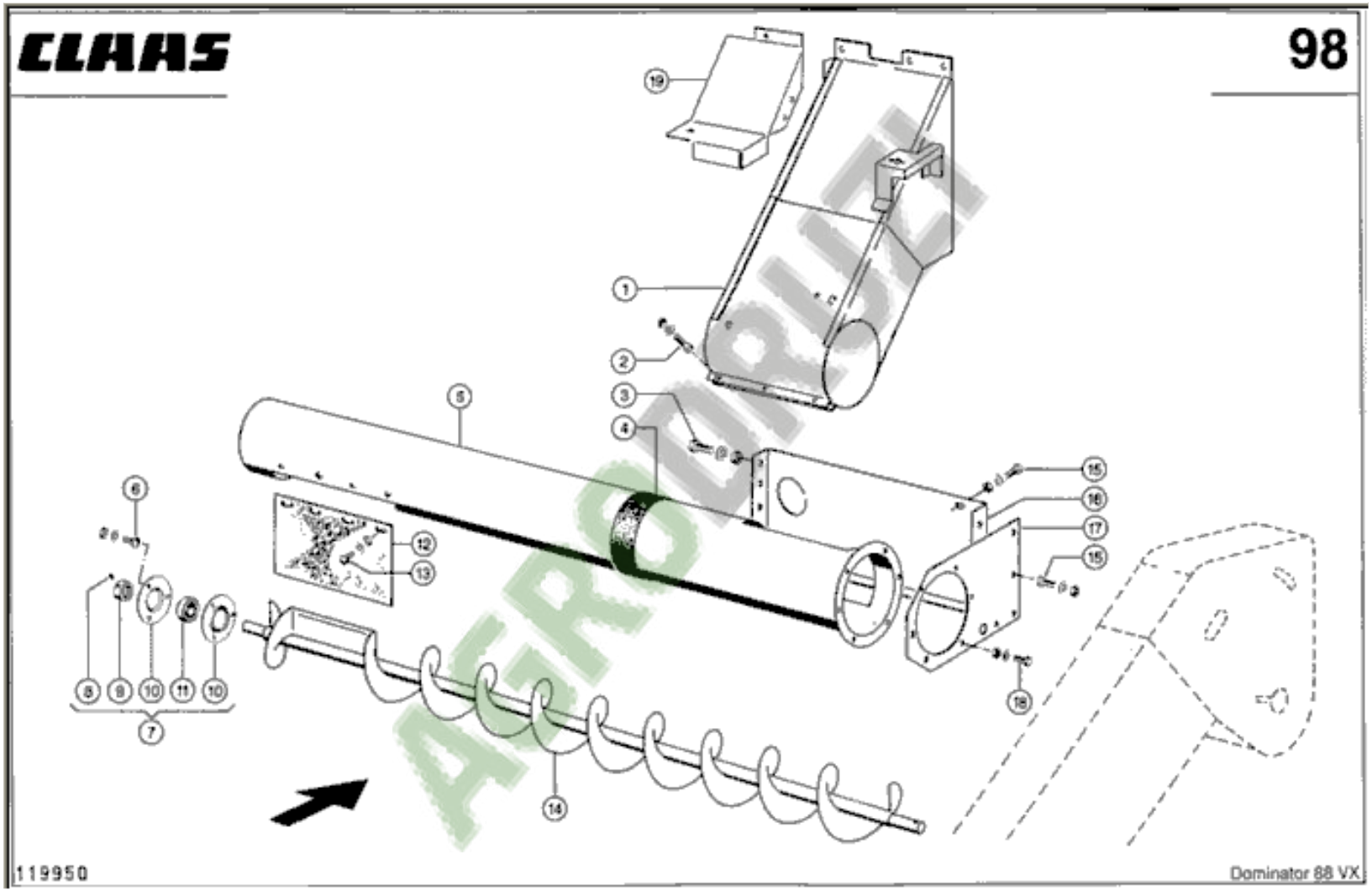
CLAAS
98
19
1
2
3
4
5
6
7
8
9
10
11
10
12
13
14
15
16
17
15
18
119950
Dominator 88 VX

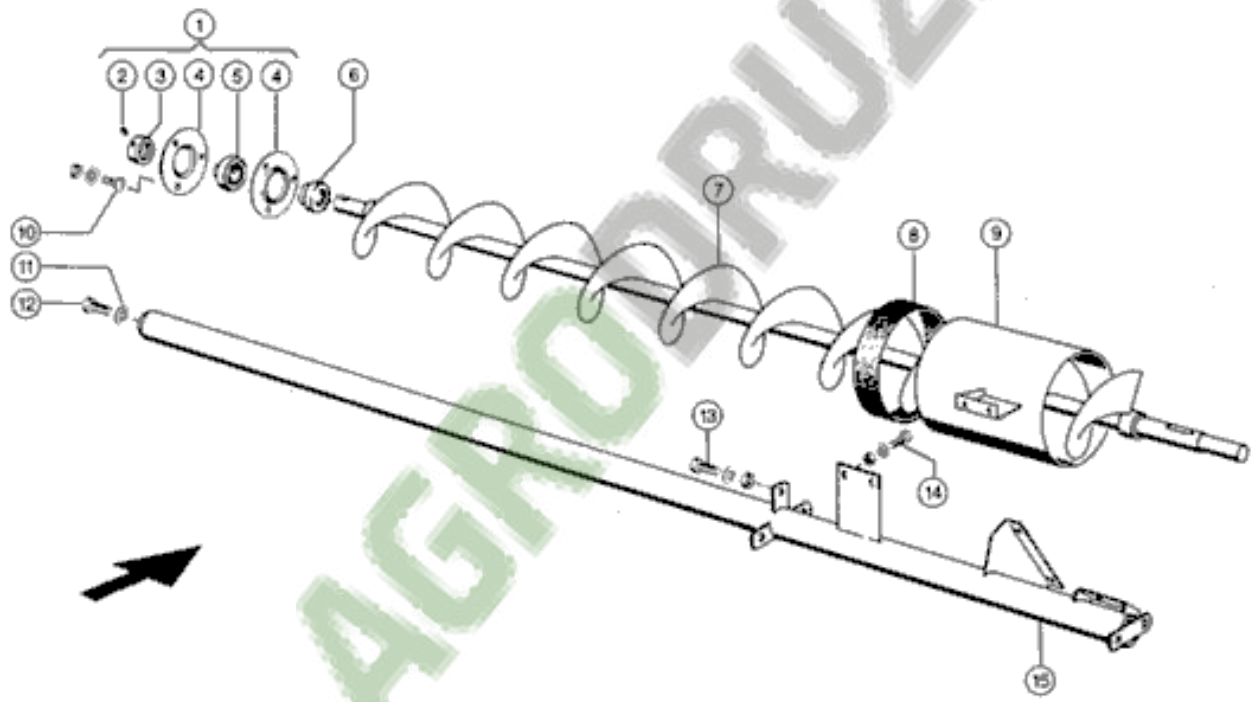


AGRODRUZI

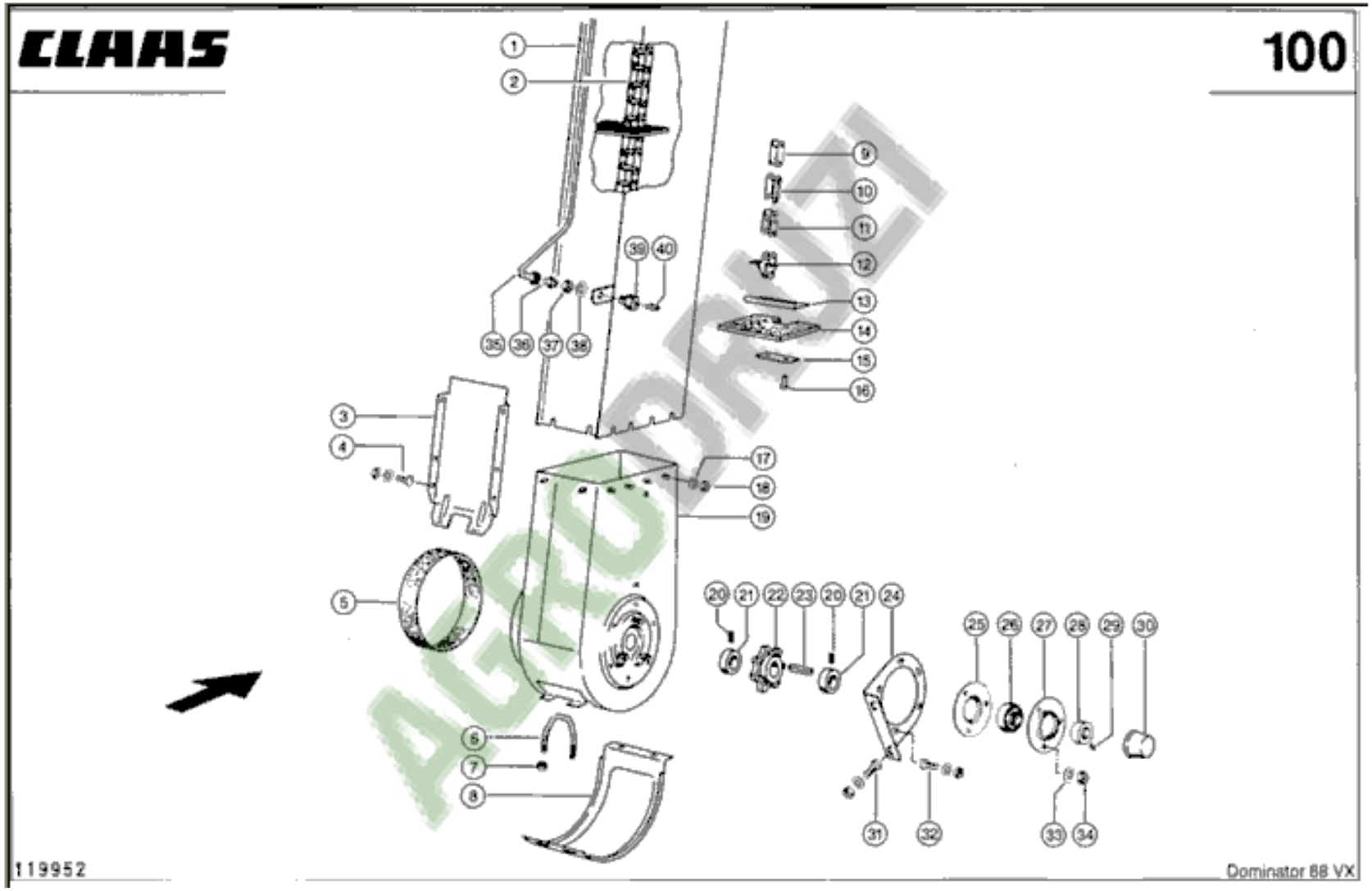
CLAAS
100
1
2
3
4
5
6
7
8
9
10
11
12
13
14
15
16
17
18
19
20
21
22
23
20
21
24
25
26
27
28
29
30
31
32
33
34
35
36
37
38
39
40
119952
Dominator 88 VX

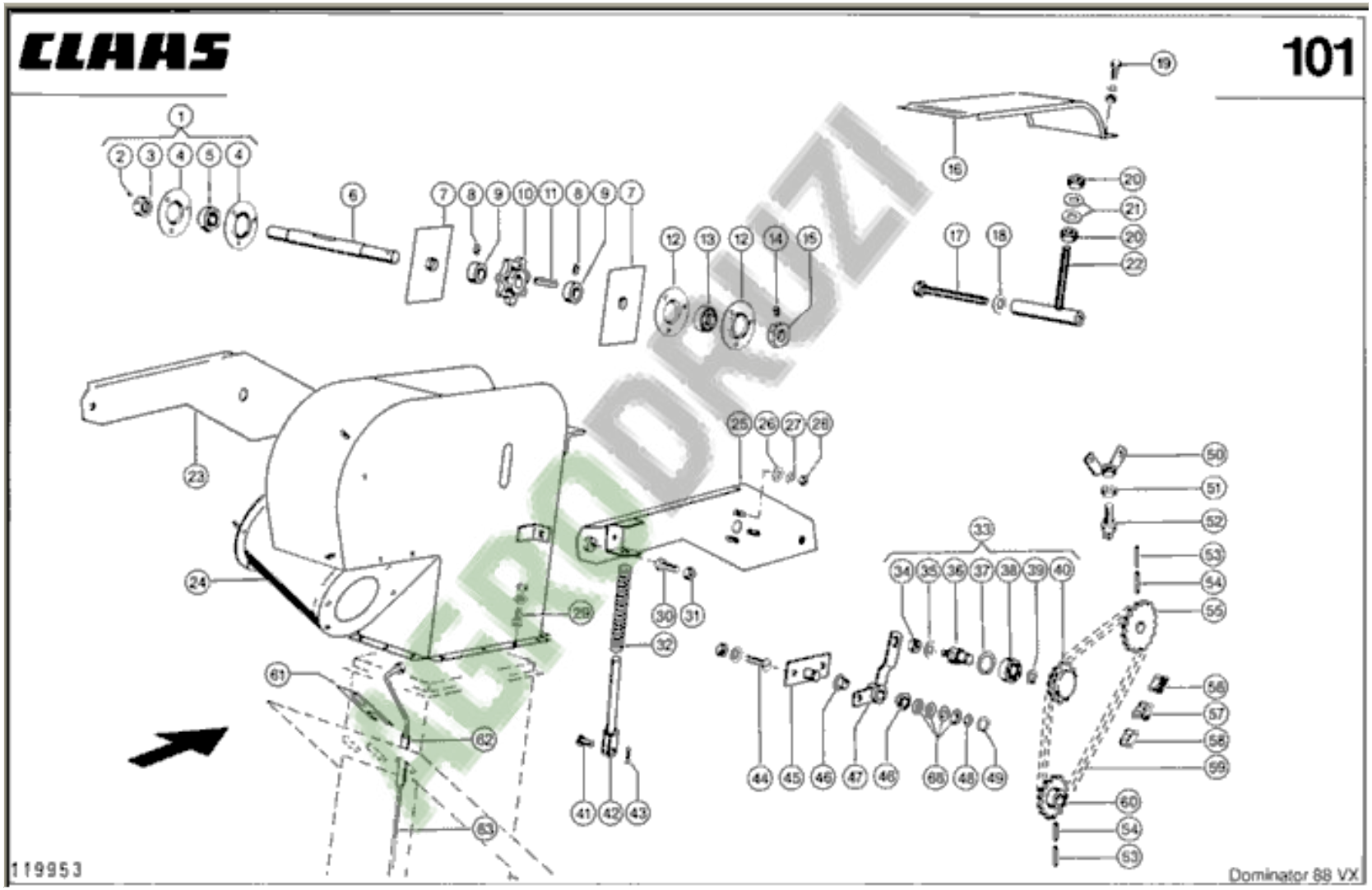
CLAAS
101
119953
Dominator 88 VX

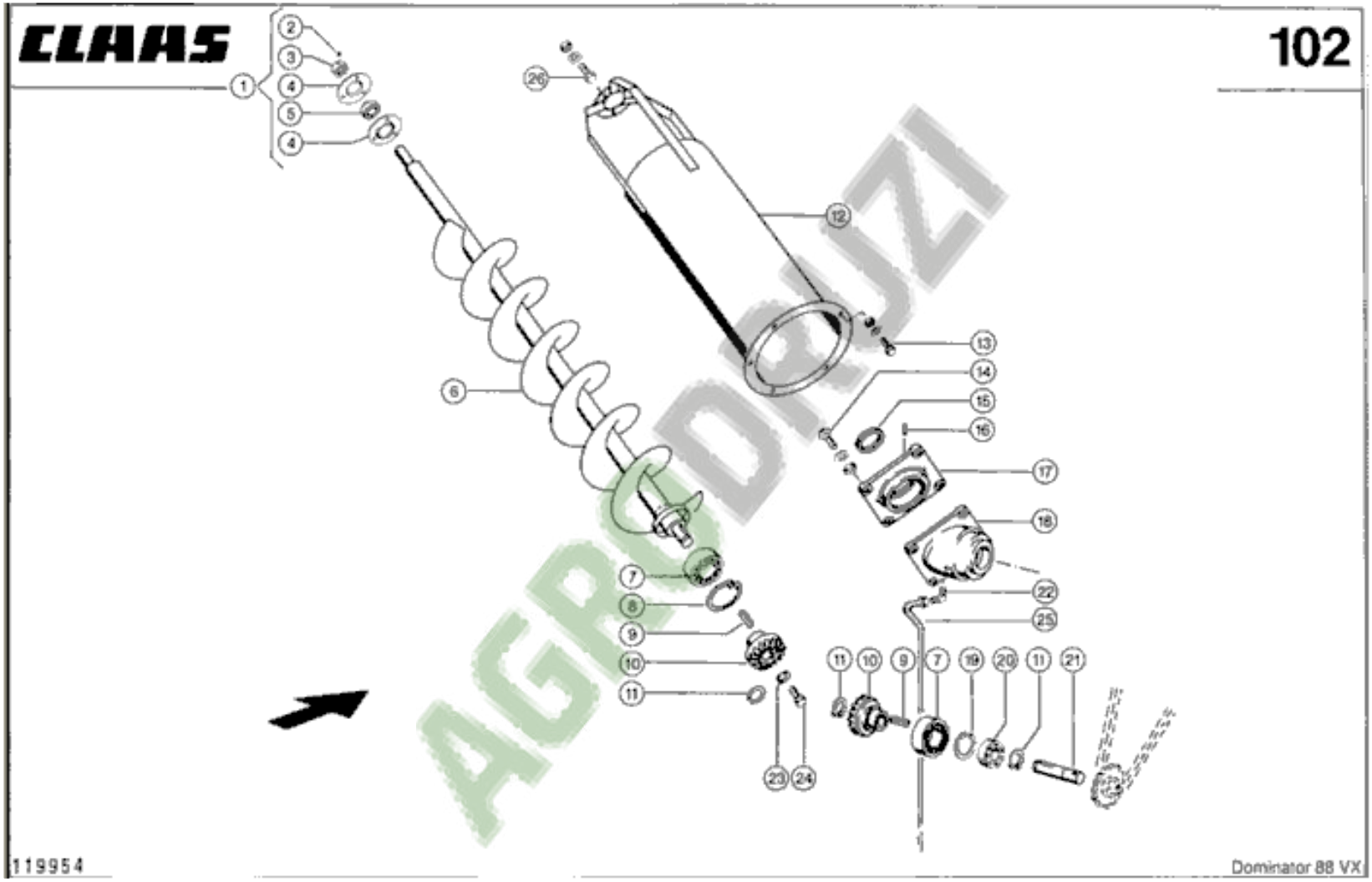
CLAAS
102
1
2
3
4
5
4
26
12
13
14
15
16
17
18
6
7
8
9
10
11
22
25
11
10
9
7
19
20
11
21
23
24
119954
Dominator 88 VX

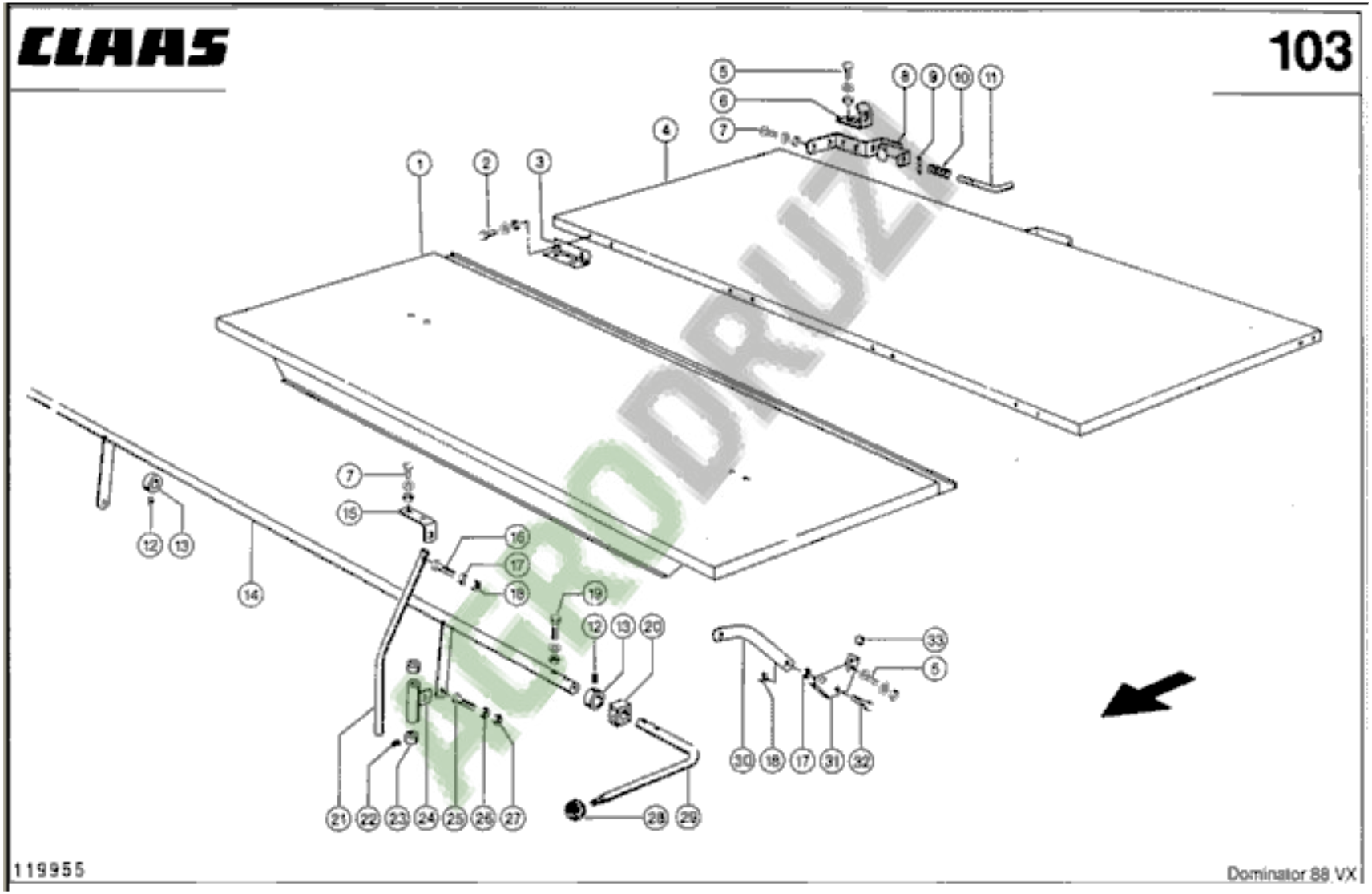
CLAAS
103
119955
Dominator 88 VX

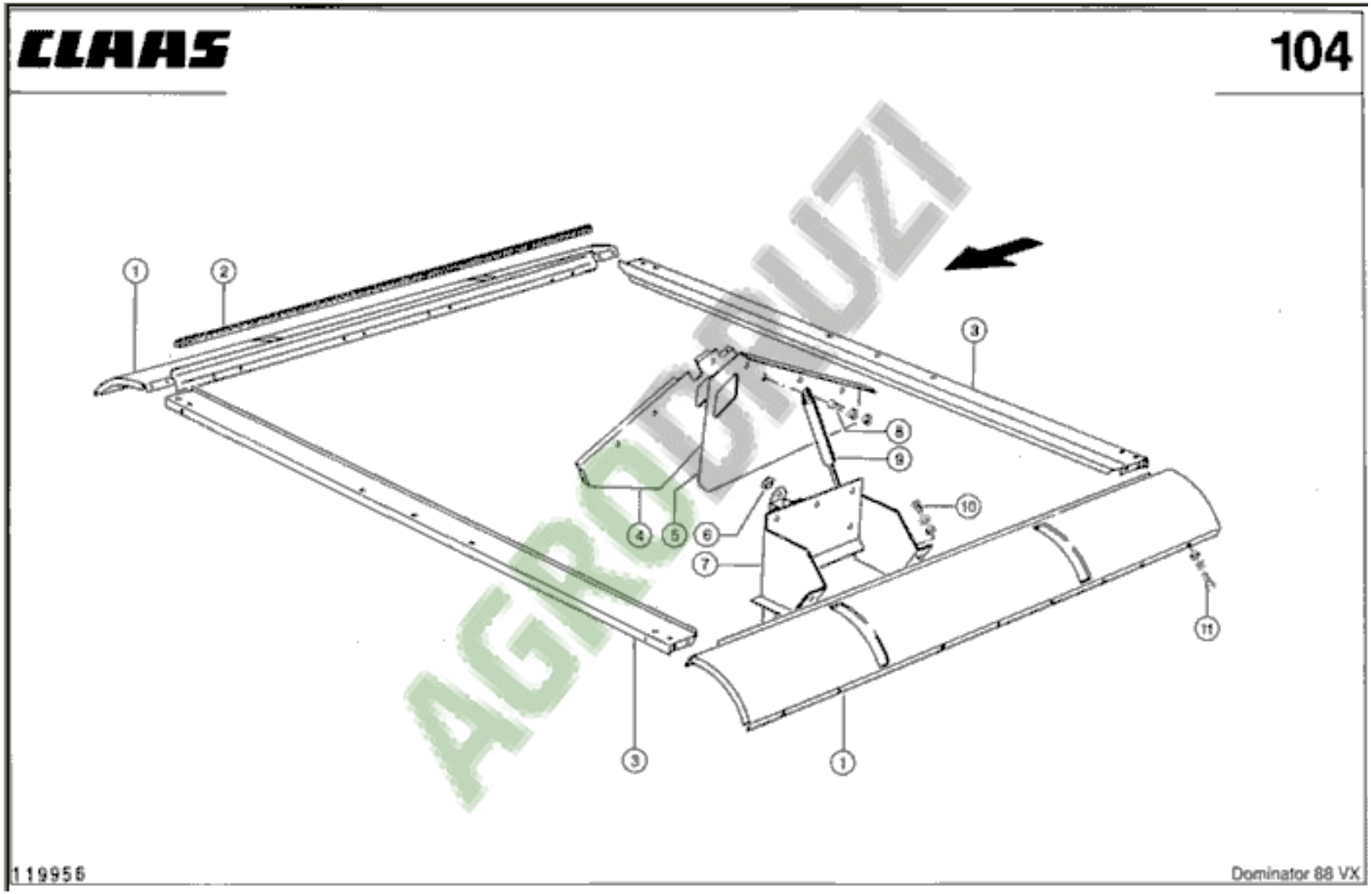


AGRODIUZI

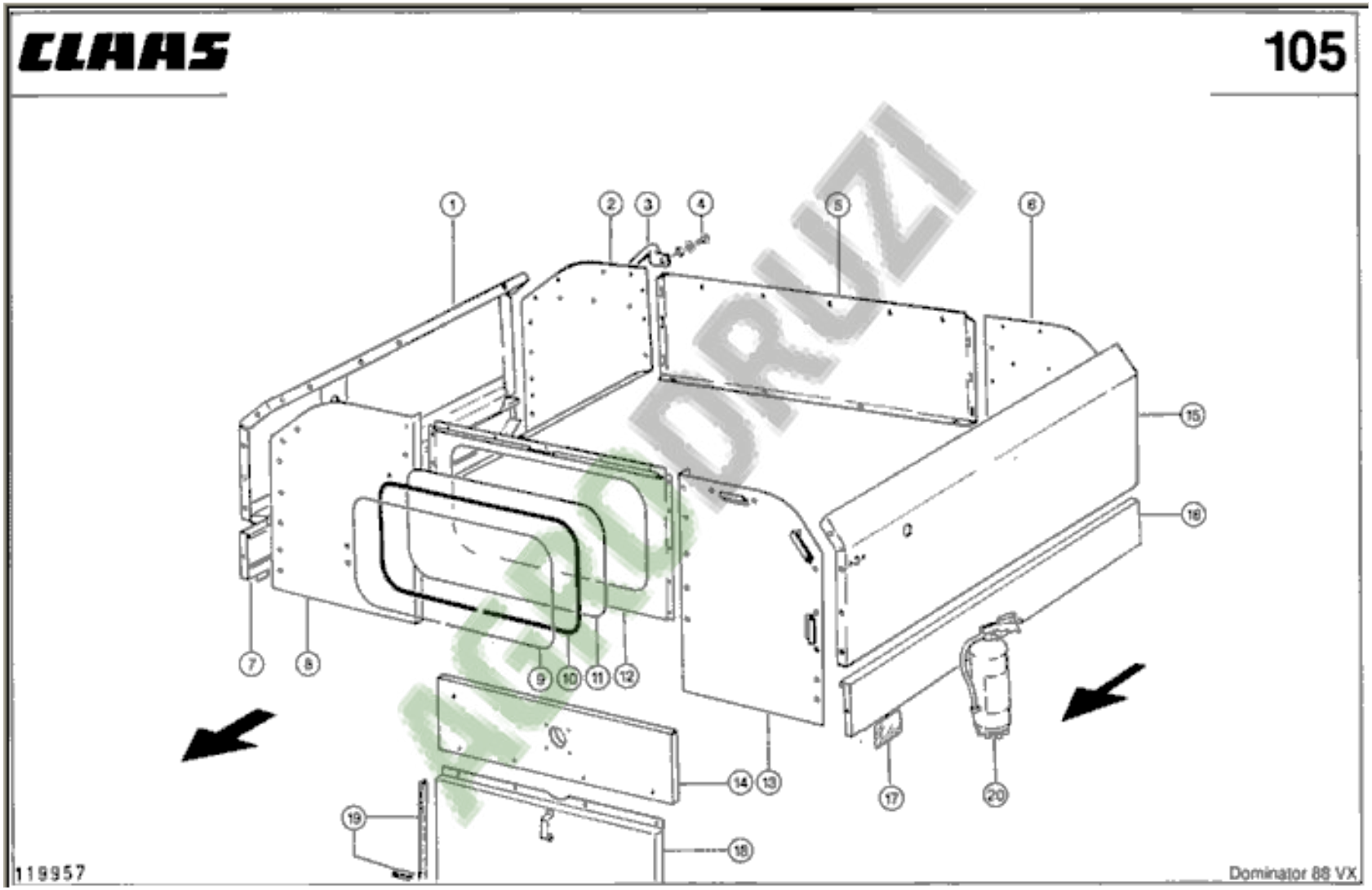
1
2
3
4
5
6
7
8
9
10
11
12
13
14
15
16
17
18
19
20
119957
Dominator 88 VX

AGRODRUZI

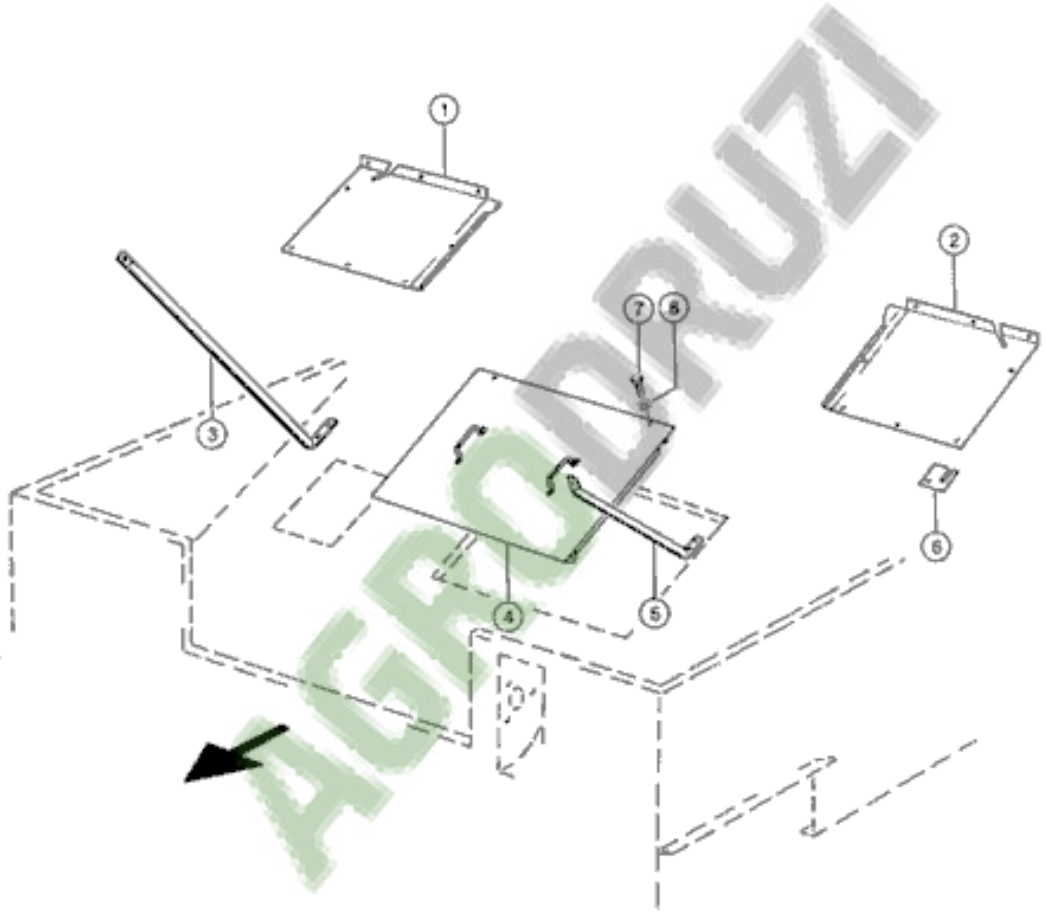


AGRODRUZI

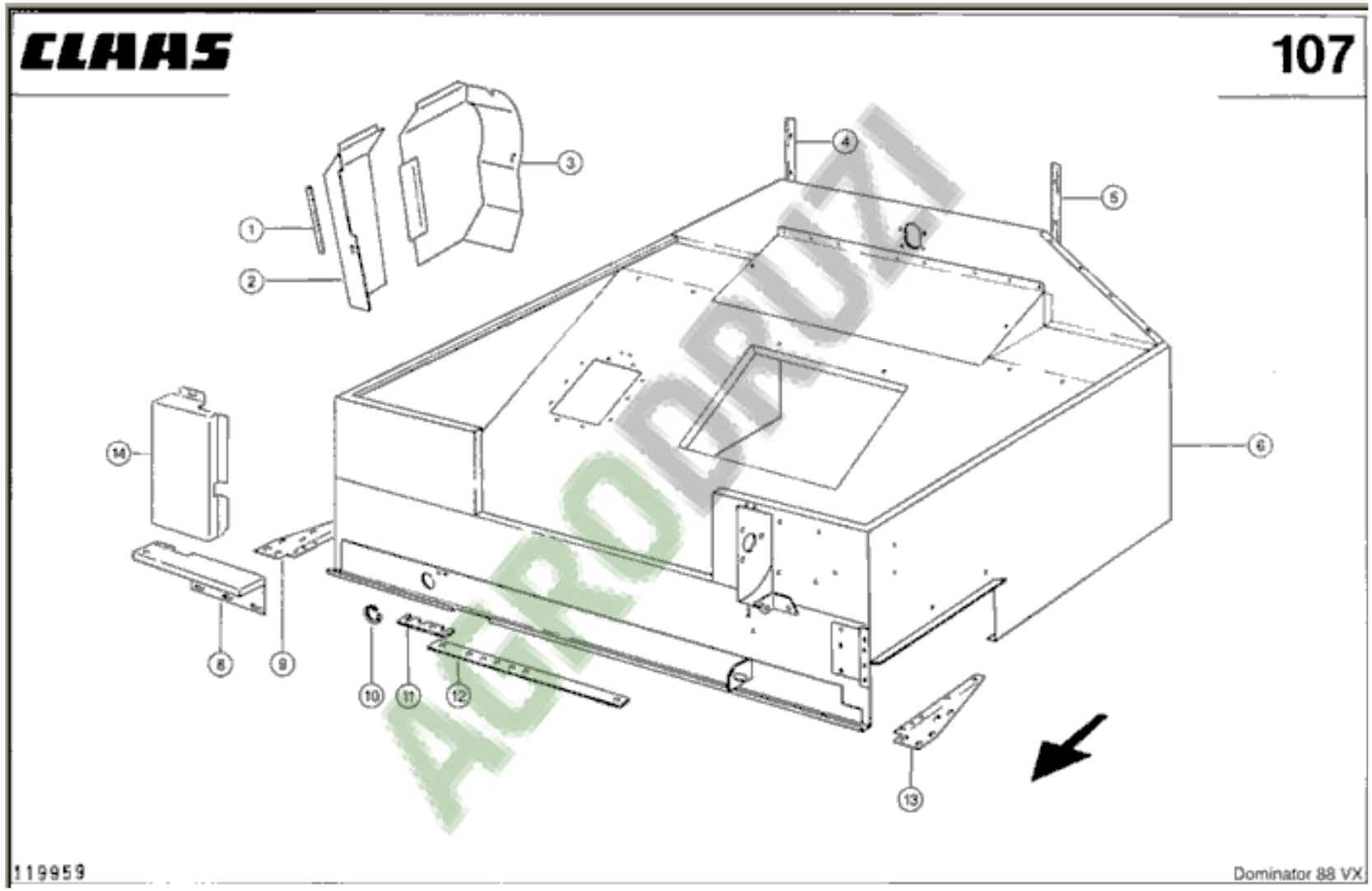
CLAAS
107
1
2
3
4
5
6
8
9
10
11
12
13
14
119959
Dominator 88 VX
AGRODRUZI

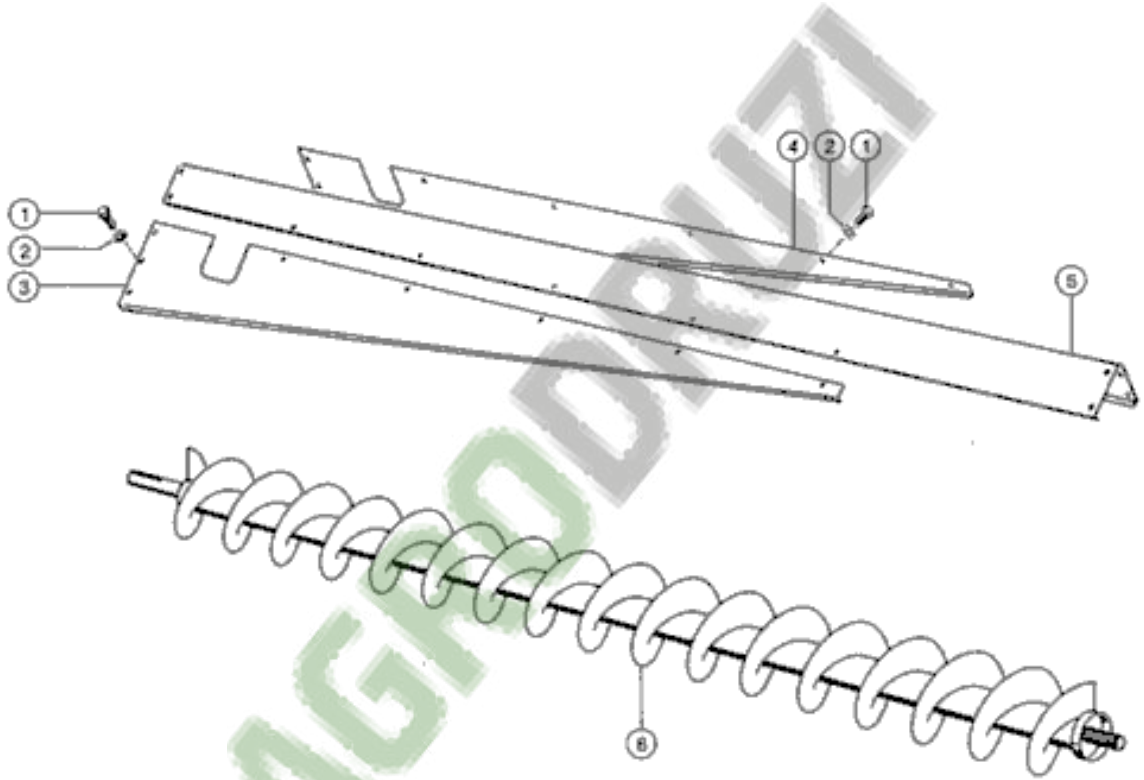


AGRODRUŽI

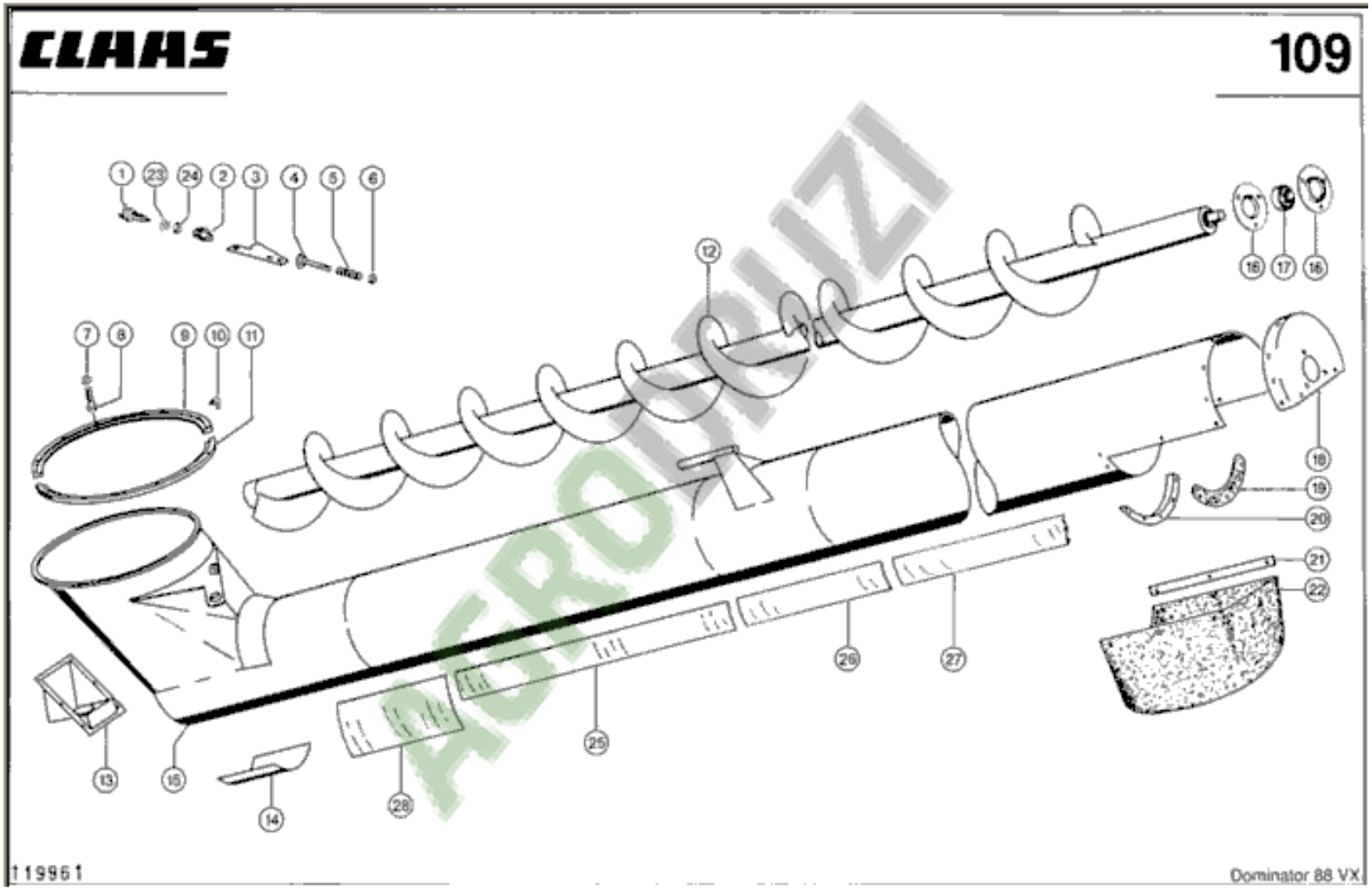
CLAAS
109
1
23
24
2
3
4
5
6
7
8
9
10
11
12
13
14
15
16
17
16
18
19
20
21
22
25
26
27
28
119961
Dominator 88 VX

# Strohablage

AGRODRUZI

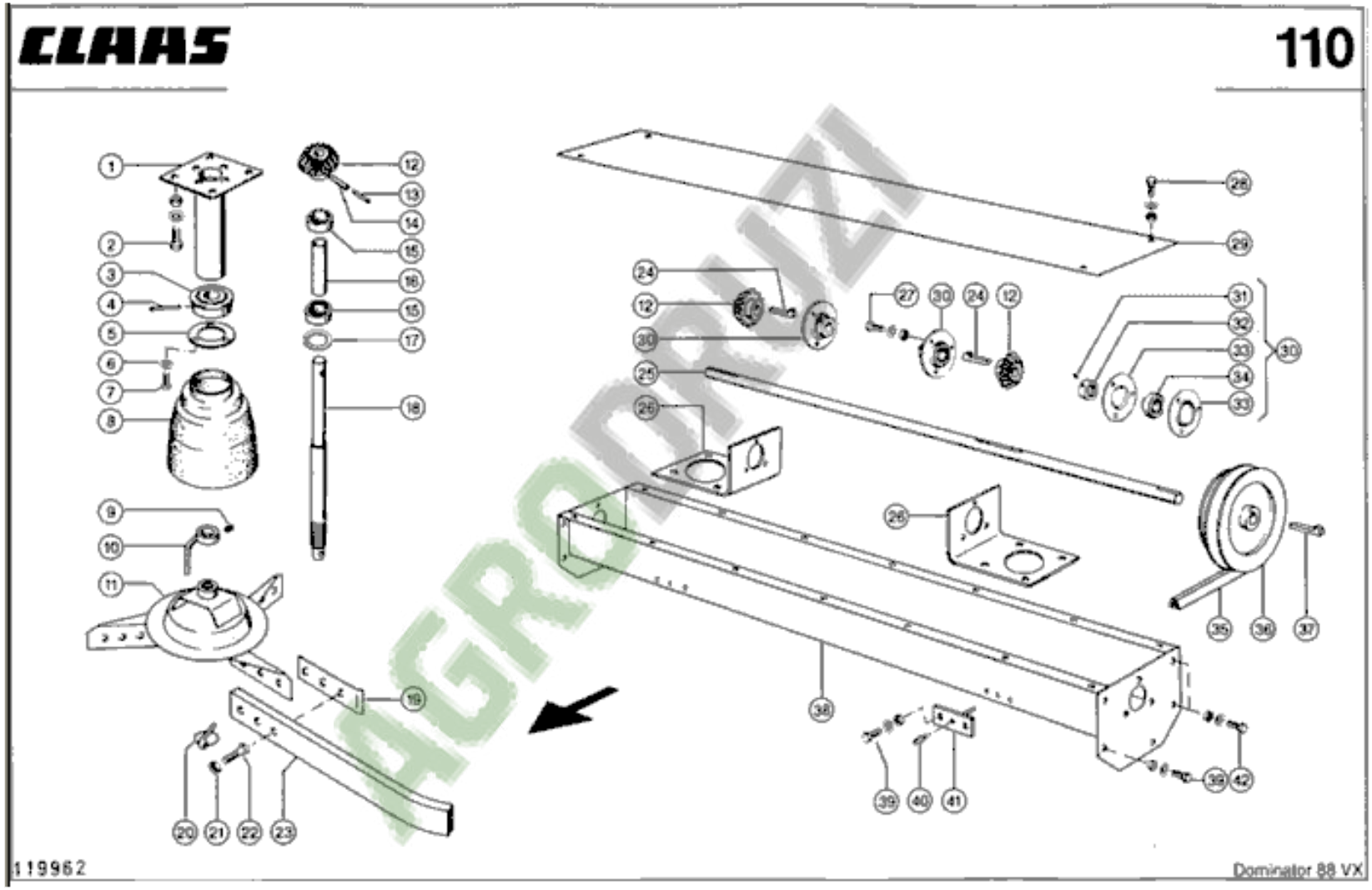


AGRODRUZI

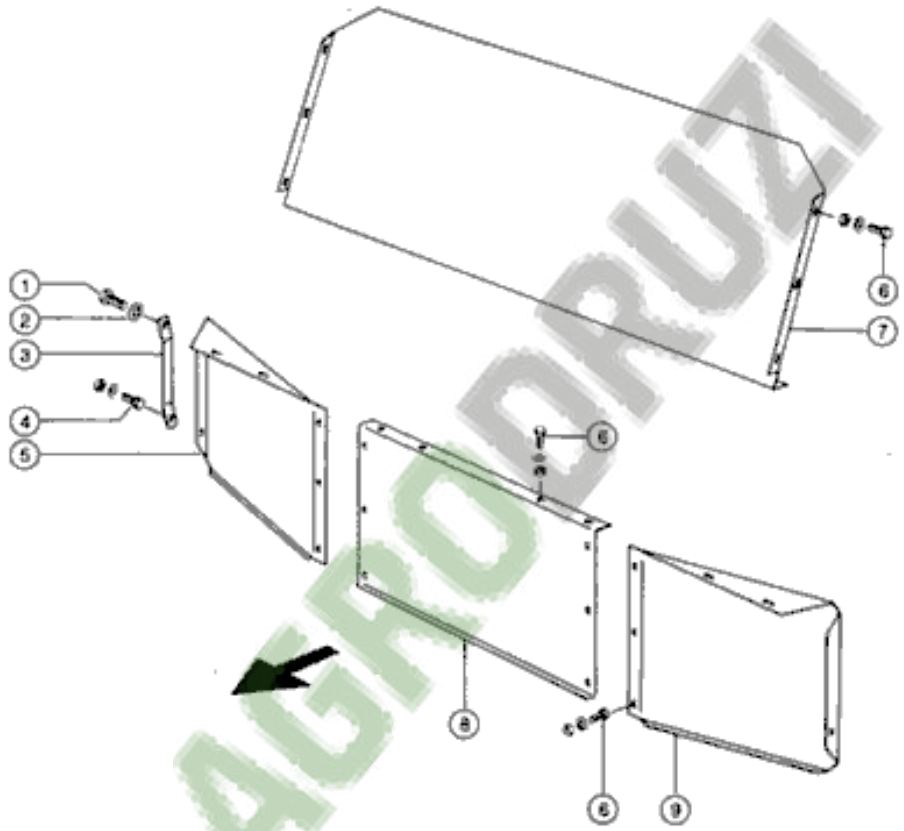


AGRODRUZI

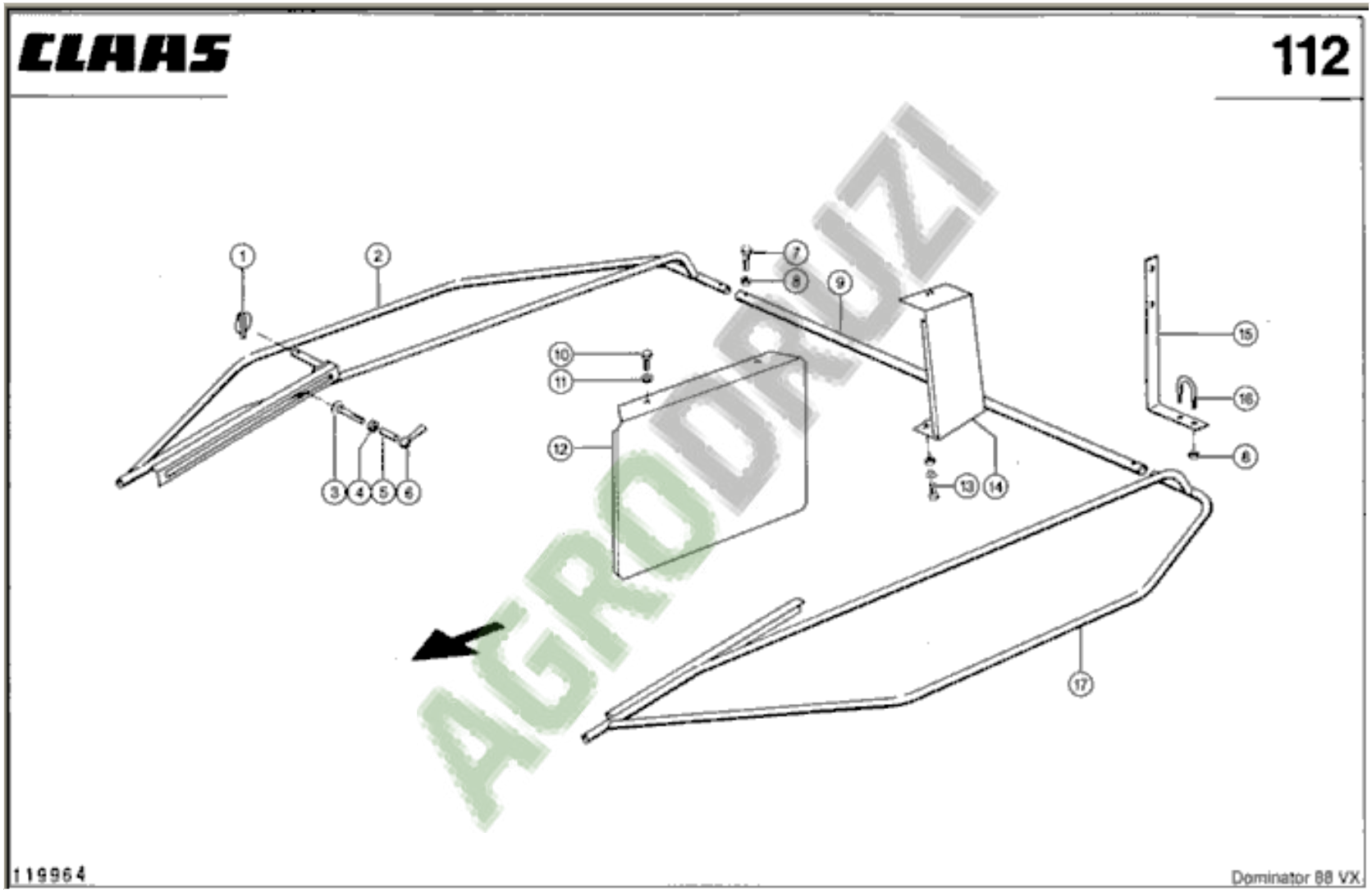
CLAAS
112
1
2
3
4
5
6
7
8
9
10
11
12
13
14
15
16
17
AGRODRUZI
119964
Dominator 88 VX

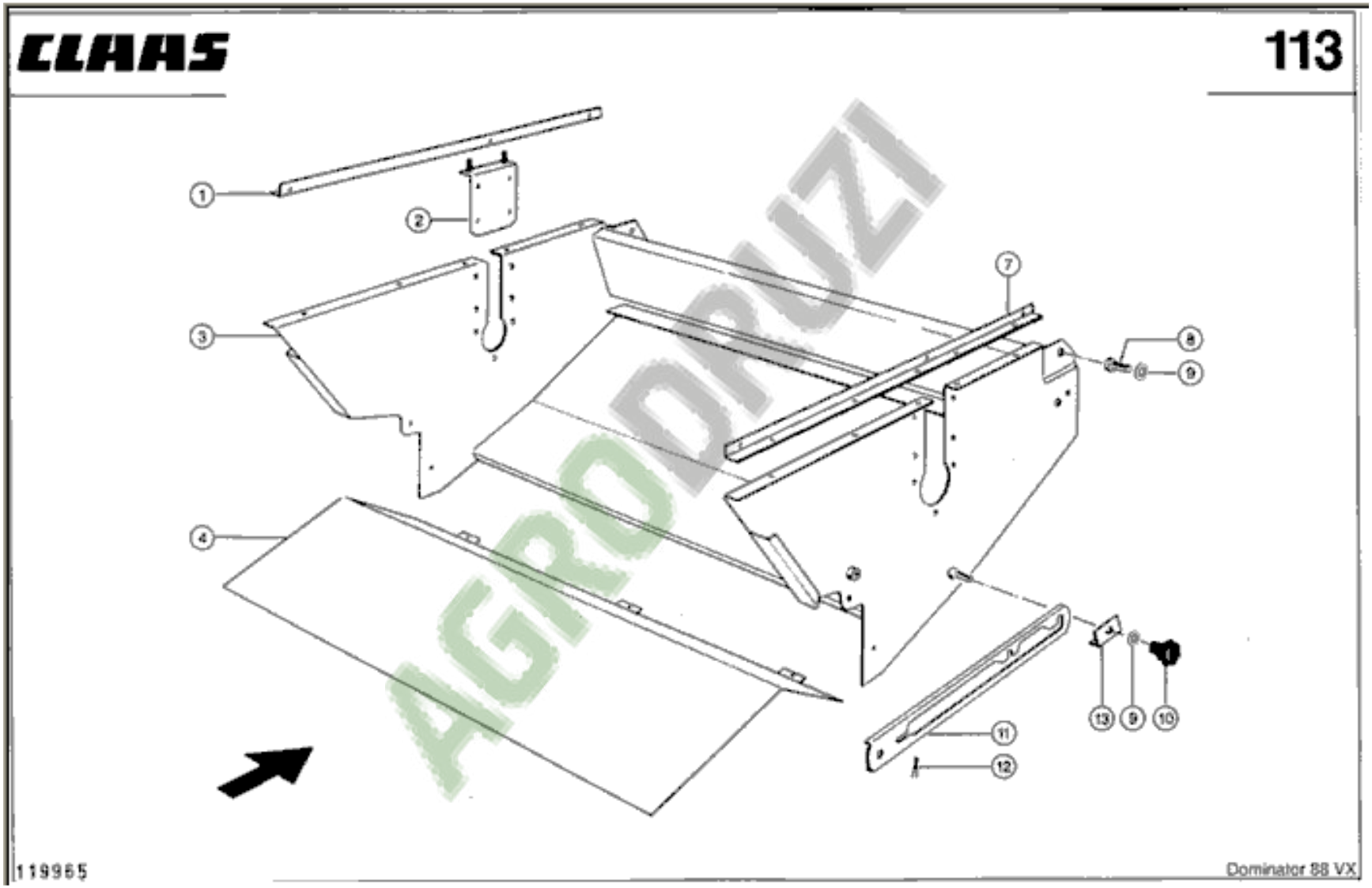
CLAAS
113
1
2
3
4
7
8
9
11
12
13
9
10
AGRODRUZI
119965
Dominator 88 VX

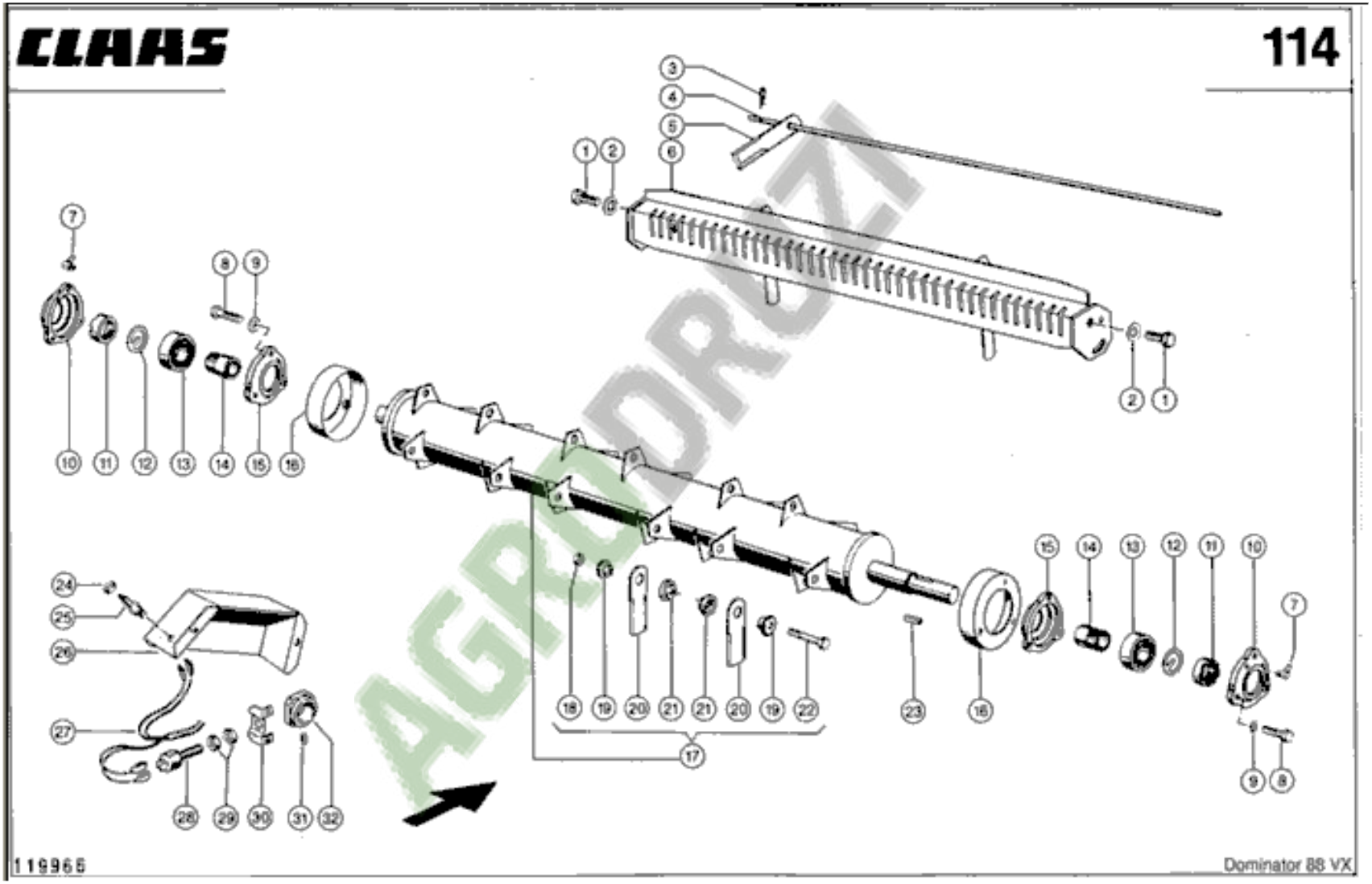


AGRODRUZI

CLAAS

# Getreide

115

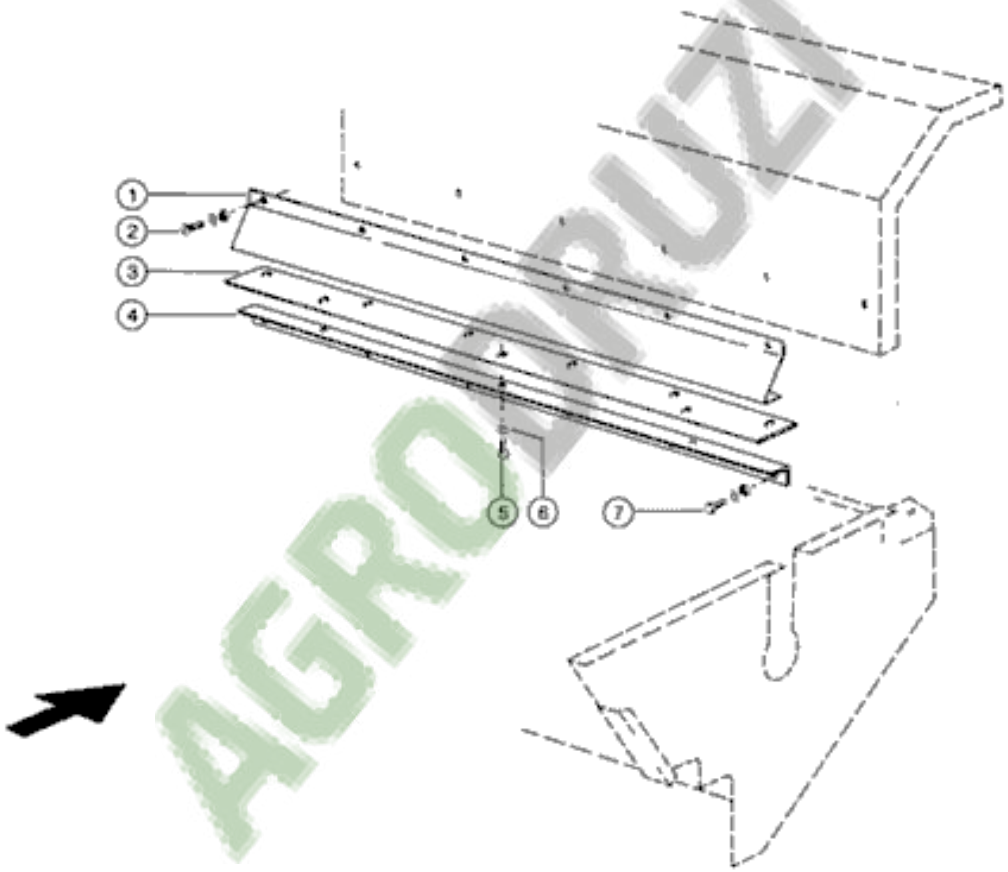


AGRODRUZI

119967

Dominator 88 VX

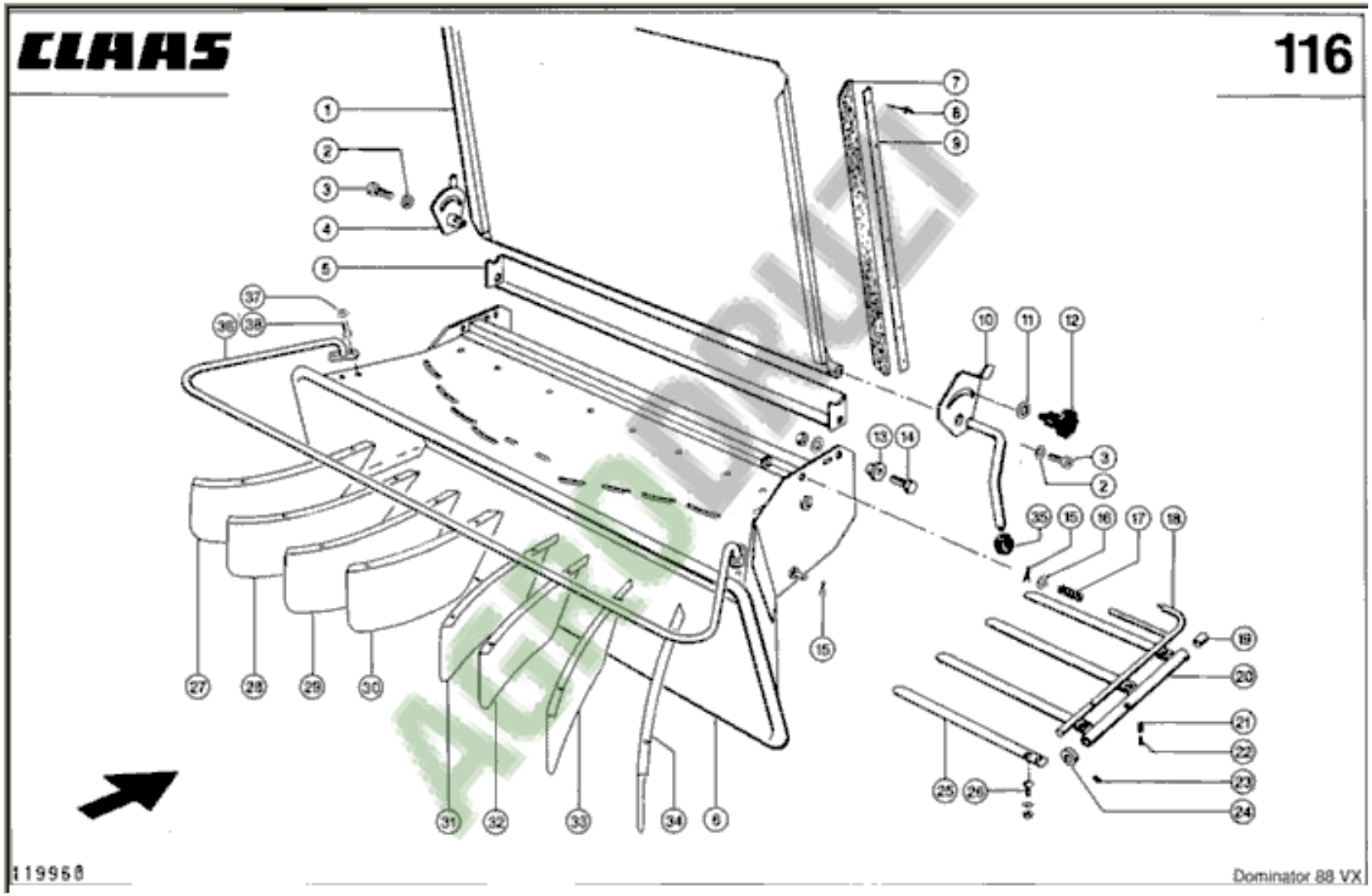
CLAAS
116
119968
Dominator 88 VX

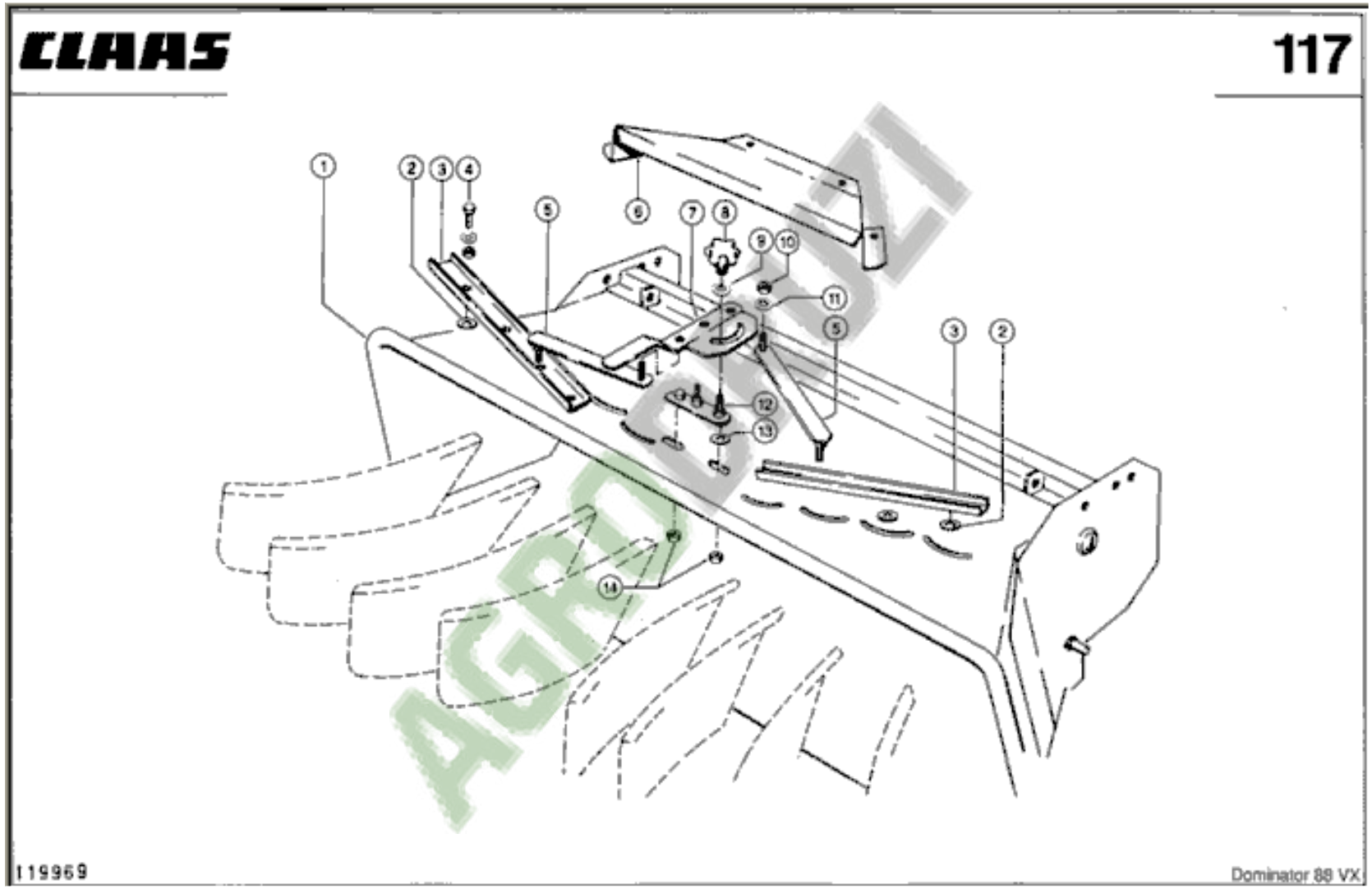
CLAAS
117
1
2
3
4
5
6
7
8
9
10
11
5
3
2
12
13
14
119969
Dominator 88 VX

CLAAS

Mais

118

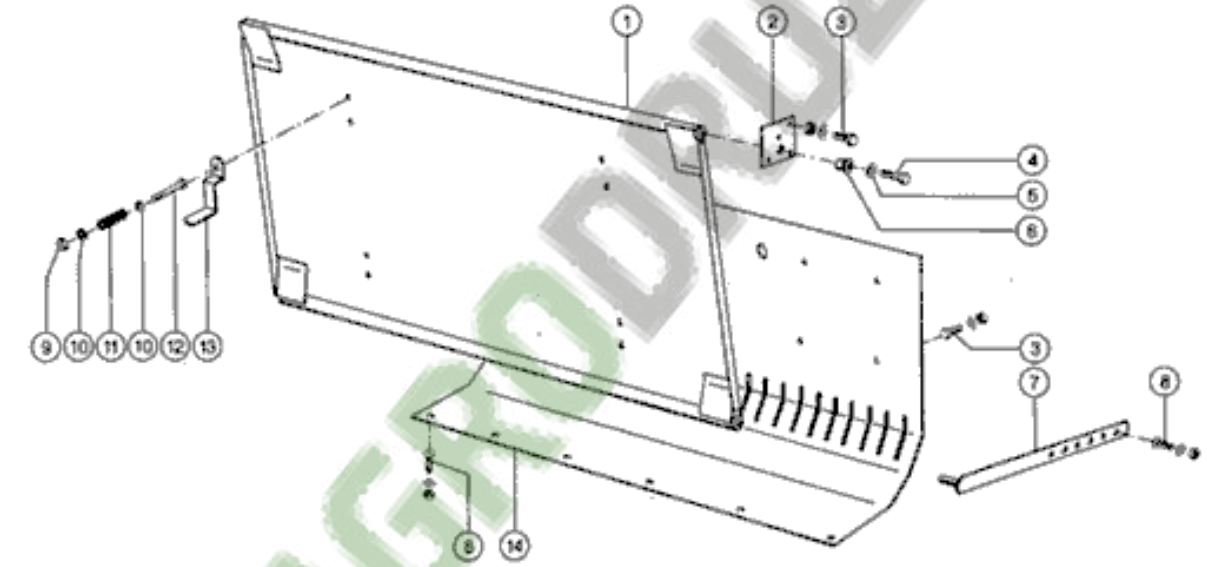


AGRODRUZI

119970

Dominator 88 VX

## Mais

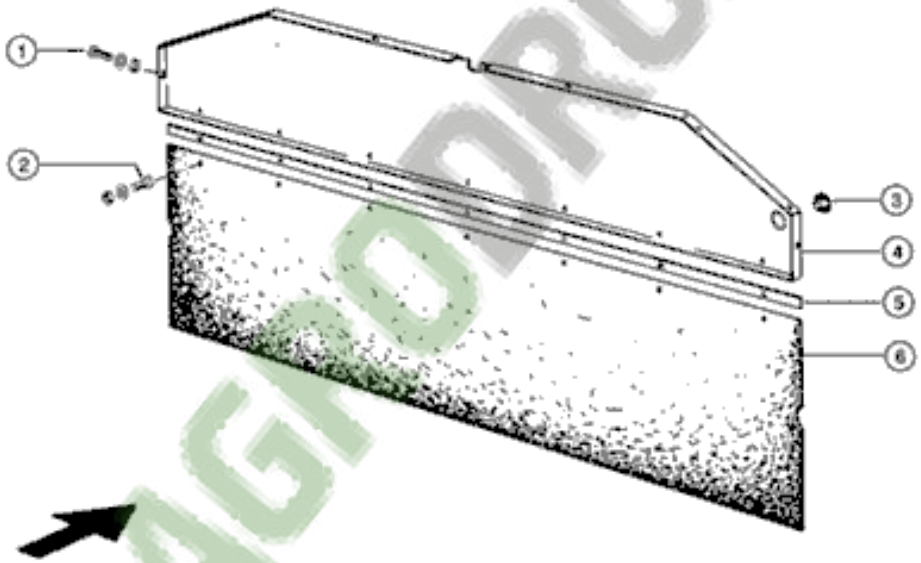


AGRODRUZI

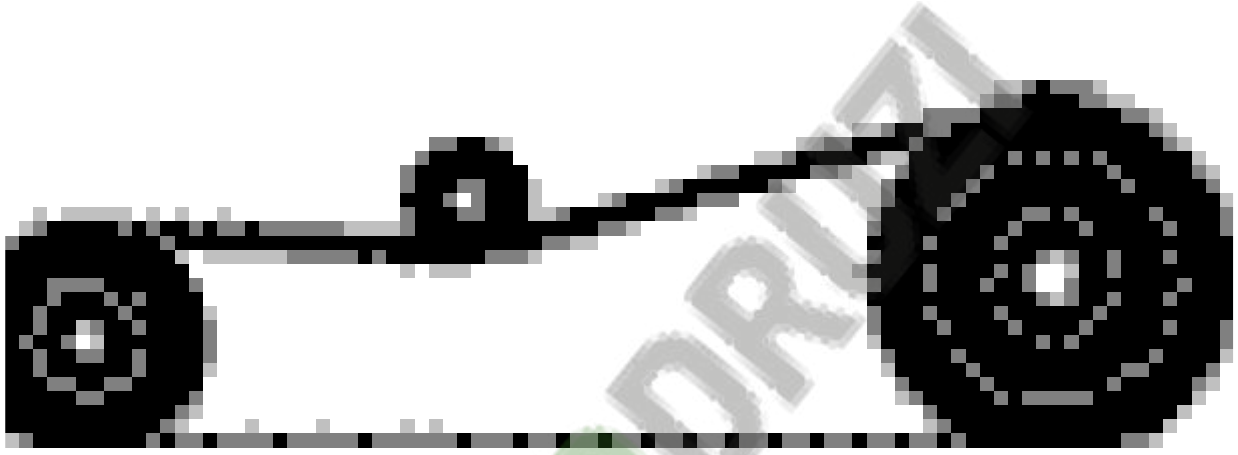

# Antriebe

AGRODRIVE

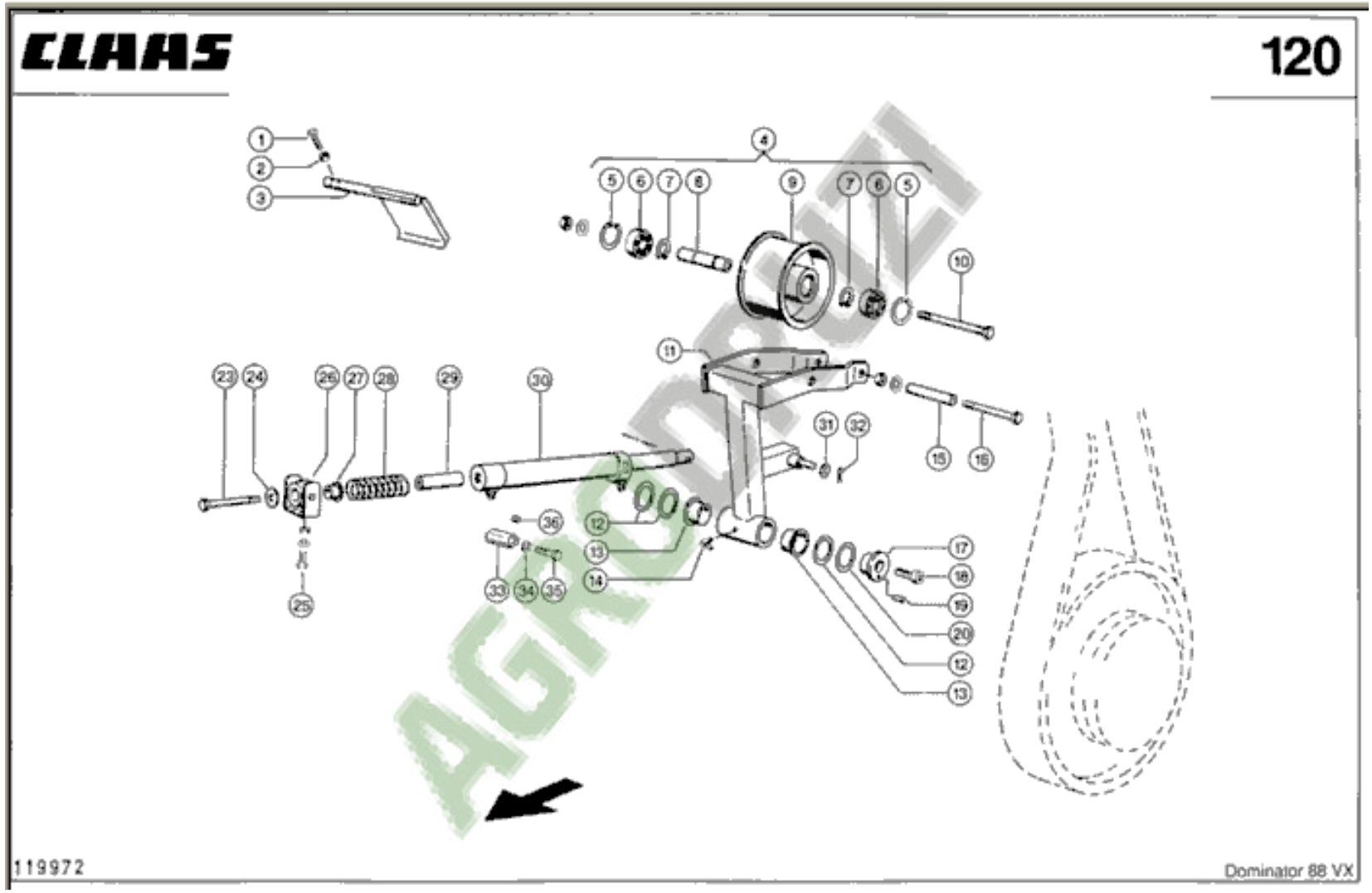
CLAAS
120
119972
Dominator 88 VX

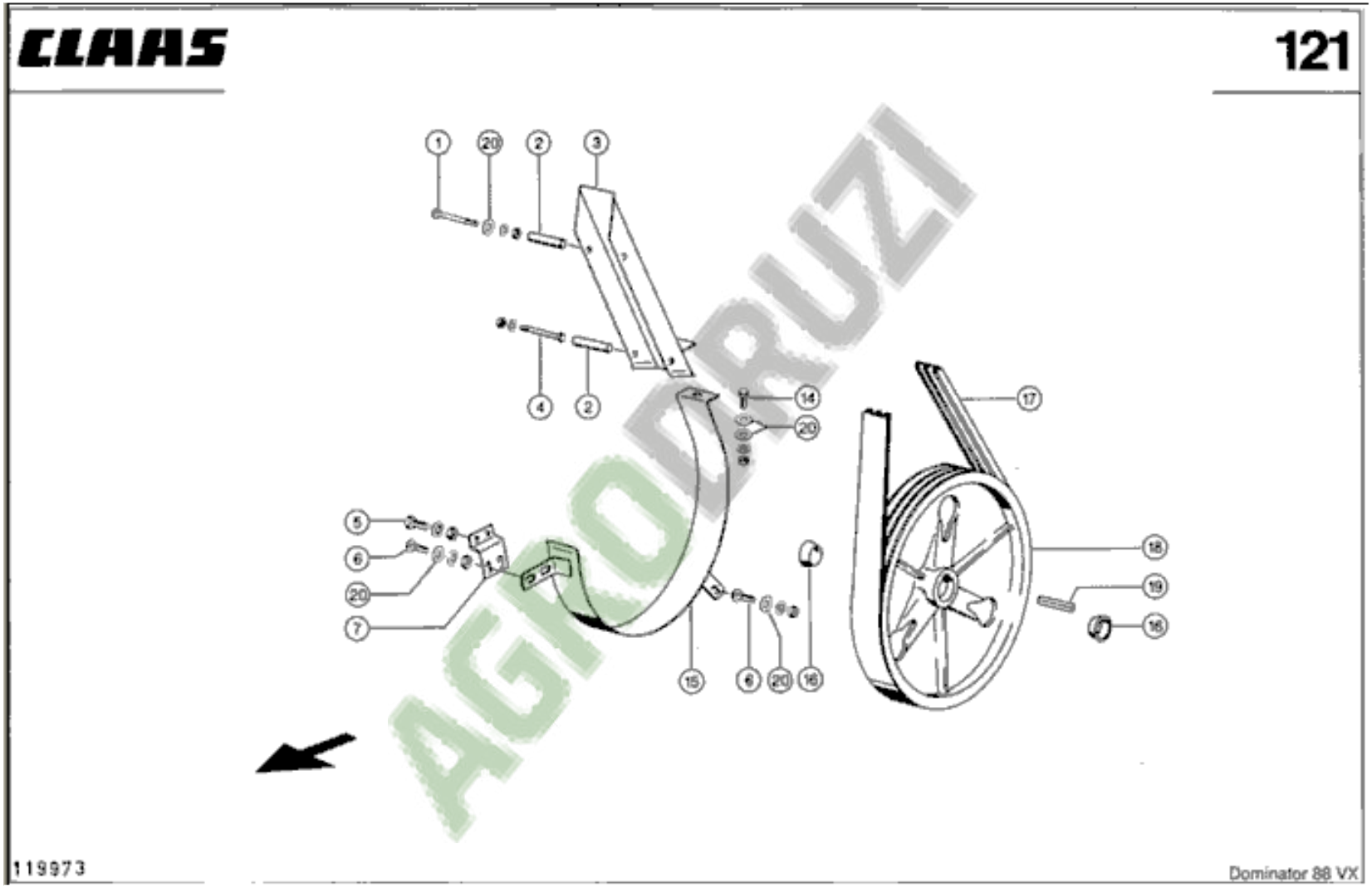
CLAAS
121
1
20
2
3
4
2
14
20
17
5
6
20
7
18
19
16
15
6
20
16
119973
Dominator 88 VX

AGRODRUZI

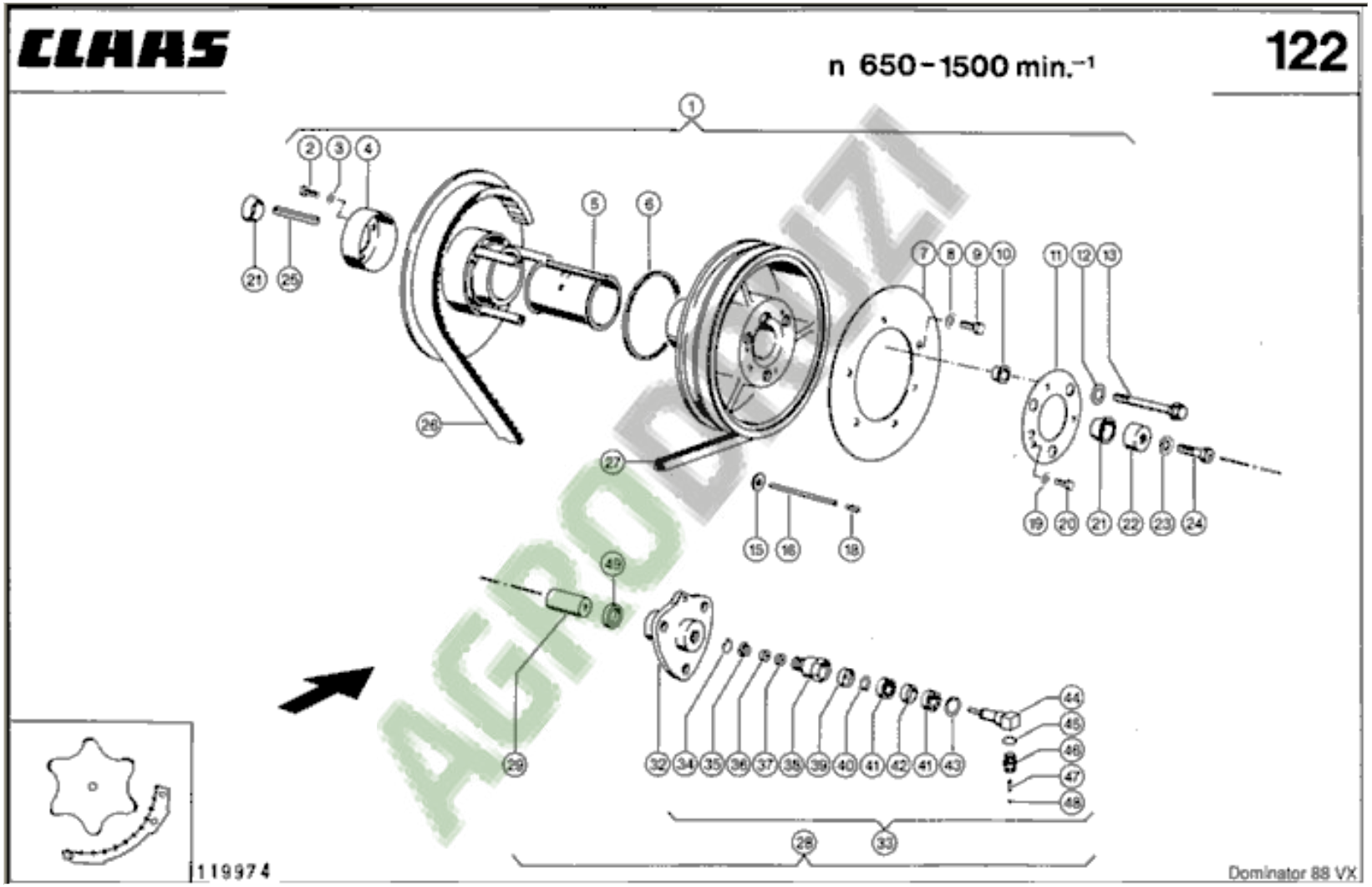


AGRODOMIZI

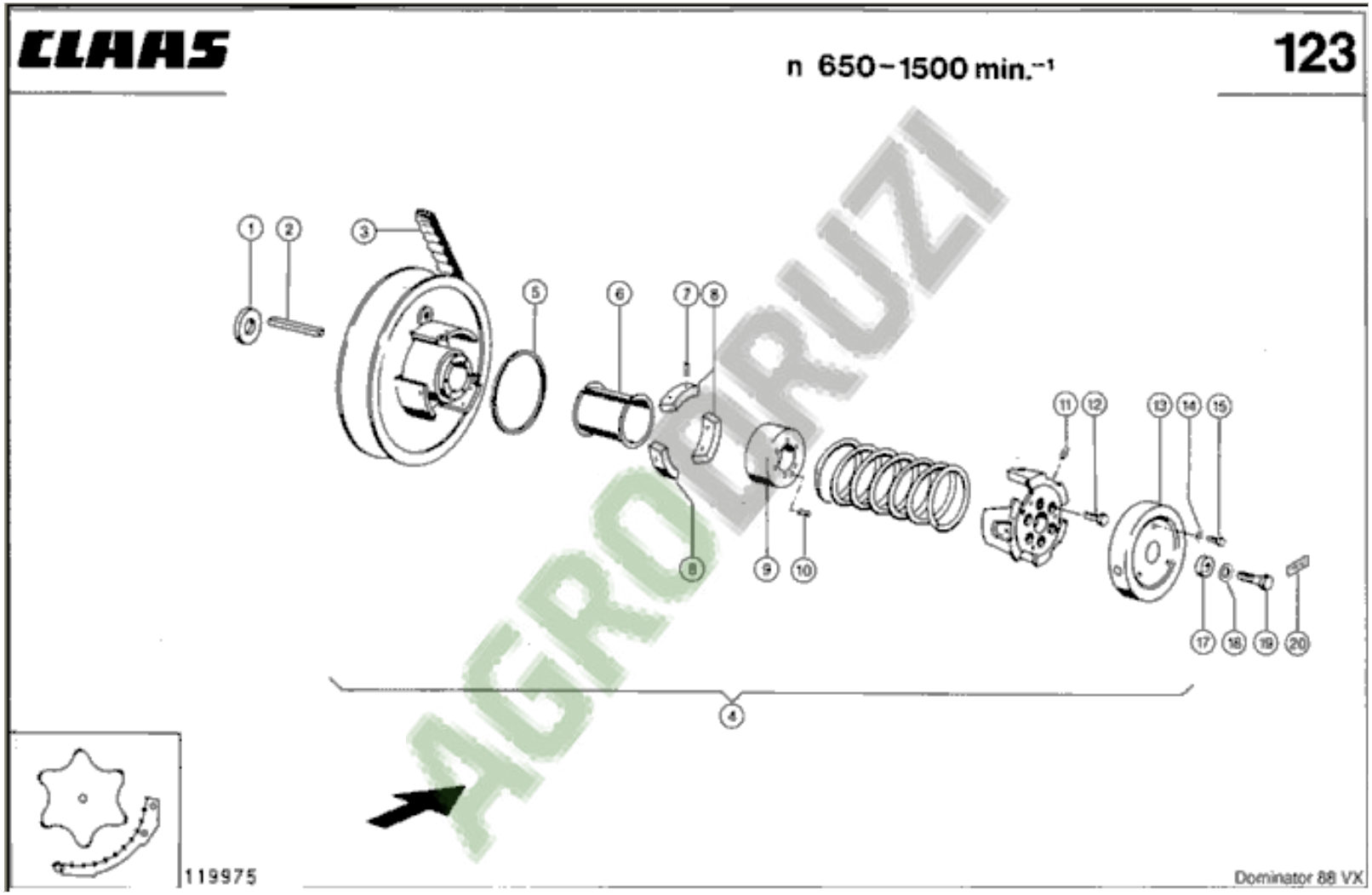
CLAAS
n 650–1500 min.⁻¹
123
1
2
3
4
5
6
7
8
9
10
11
12
13
14
15
16
17
18
19
20
119975
Dominator 88 VX

AGRODRUZI

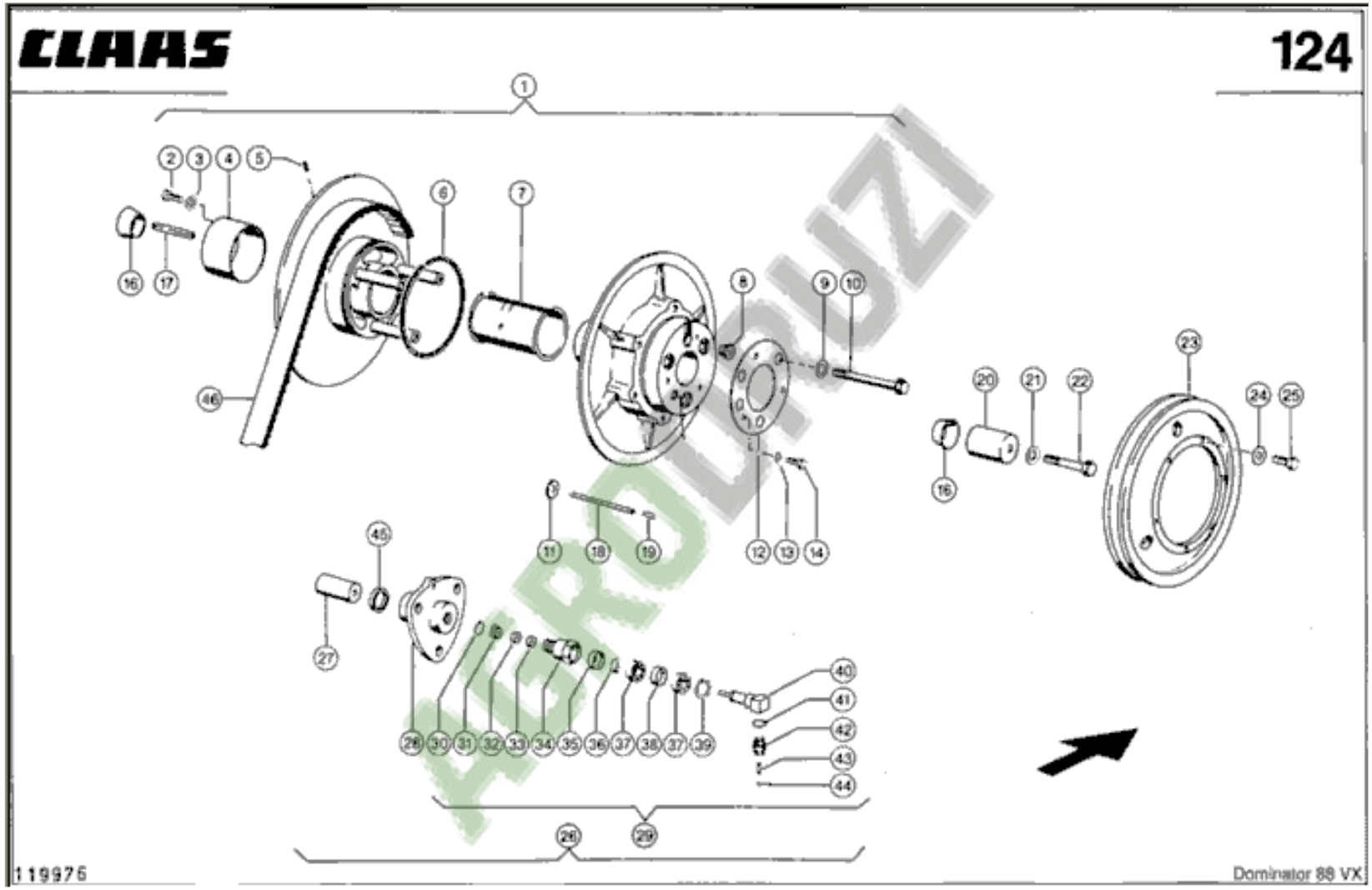
CLAAS
124
1
2
3
4
5
6
7
8
9
10
11
12
13
14
16
17
18
19
20
21
22
23
24
25
26
27
28
29
30
31
32
33
34
35
36
37
38
39
40
41
42
43
44
45
46
119976
Dominator 88 VX

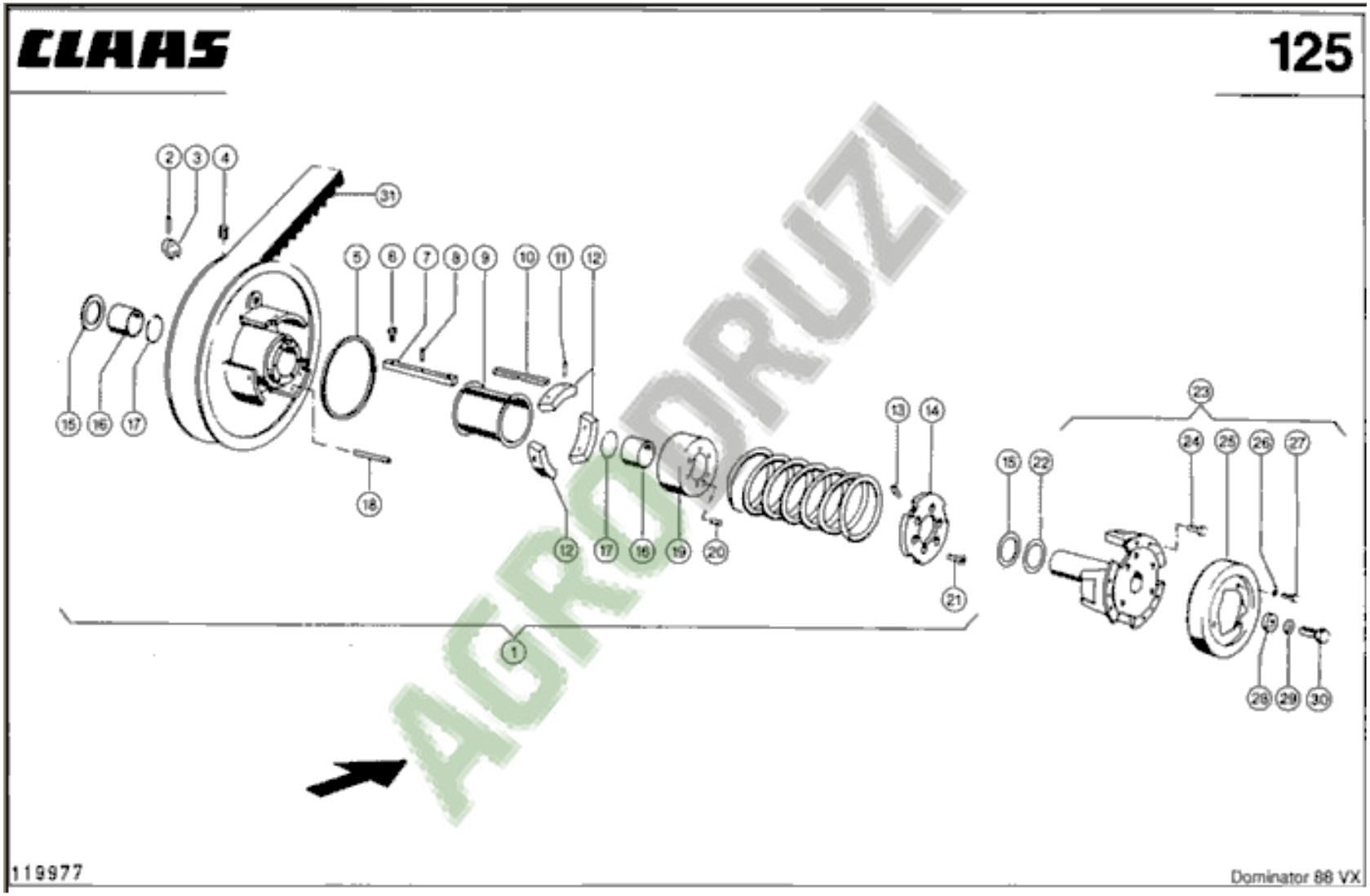
CLAAS
125
2
3
4
31
5
6
7
8
9
10
11
12
15
16
17
18
12
17
16
19
20
13
14
21
1
15
22
23
24
25
26
27
28
29
30
119977
Dominator 88 VX

AGRODRUZI

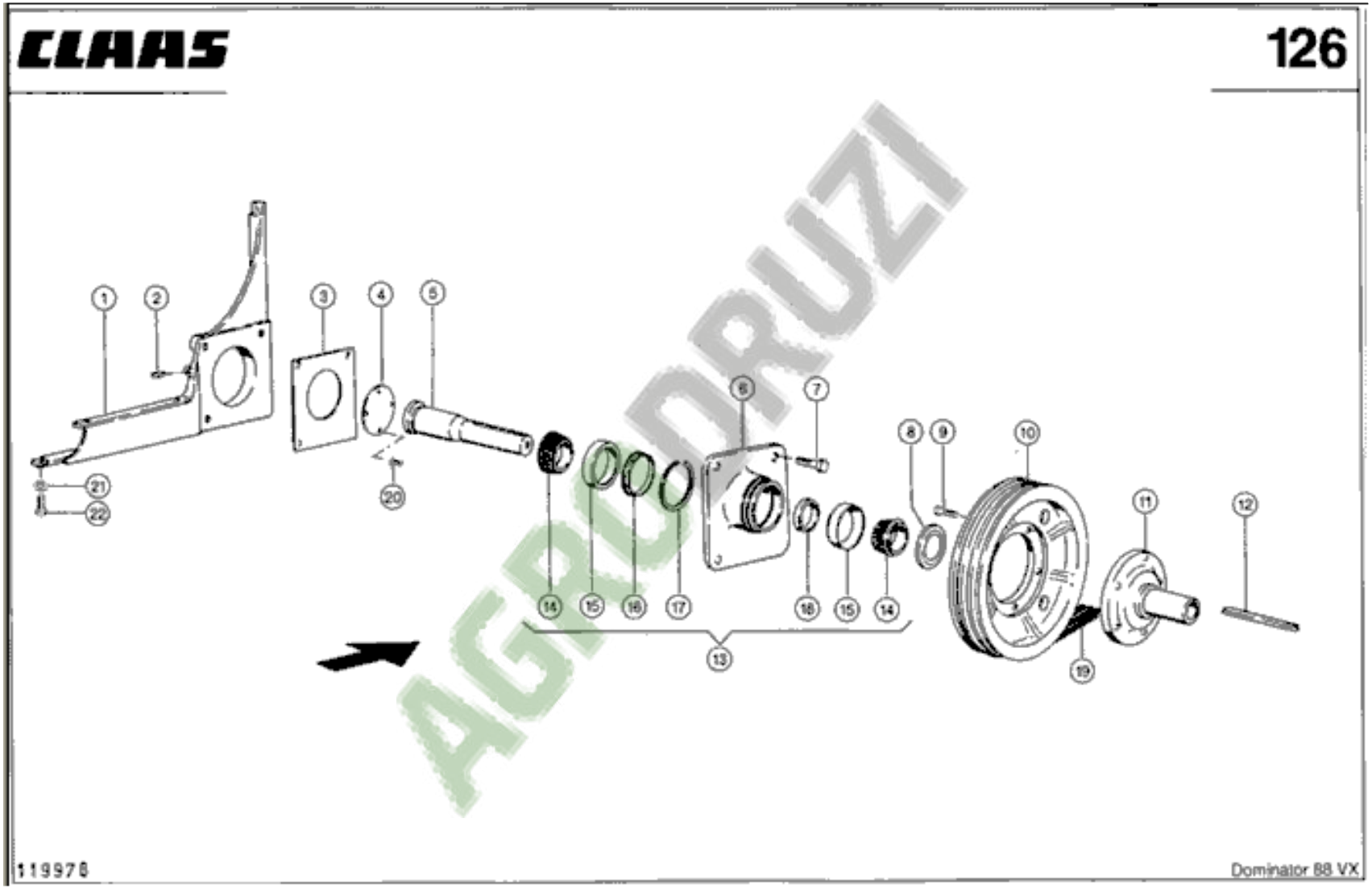
1
2
3
4
5
6
7
8
9
10
11
12
13
14
15
16
17
18
19
20
21
22
119976
Dominator 88 VX

AGRODRUZI

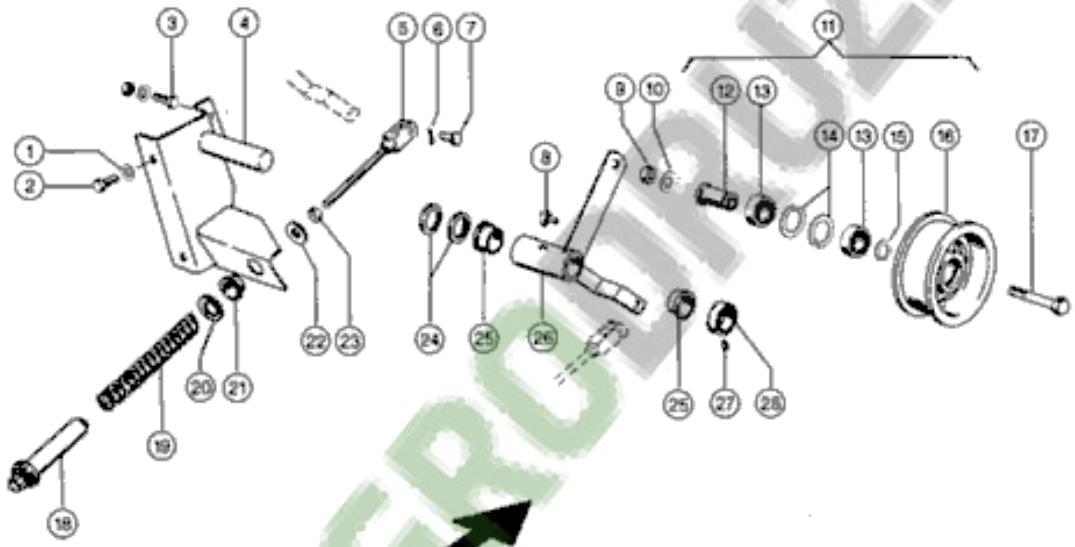
1
2
3
4
5
6
7
8
9
10
11
12
13
14
13
15
16
17
18
19
20
21
22
23
24
25
26
25
27
28

AGRODRUZI

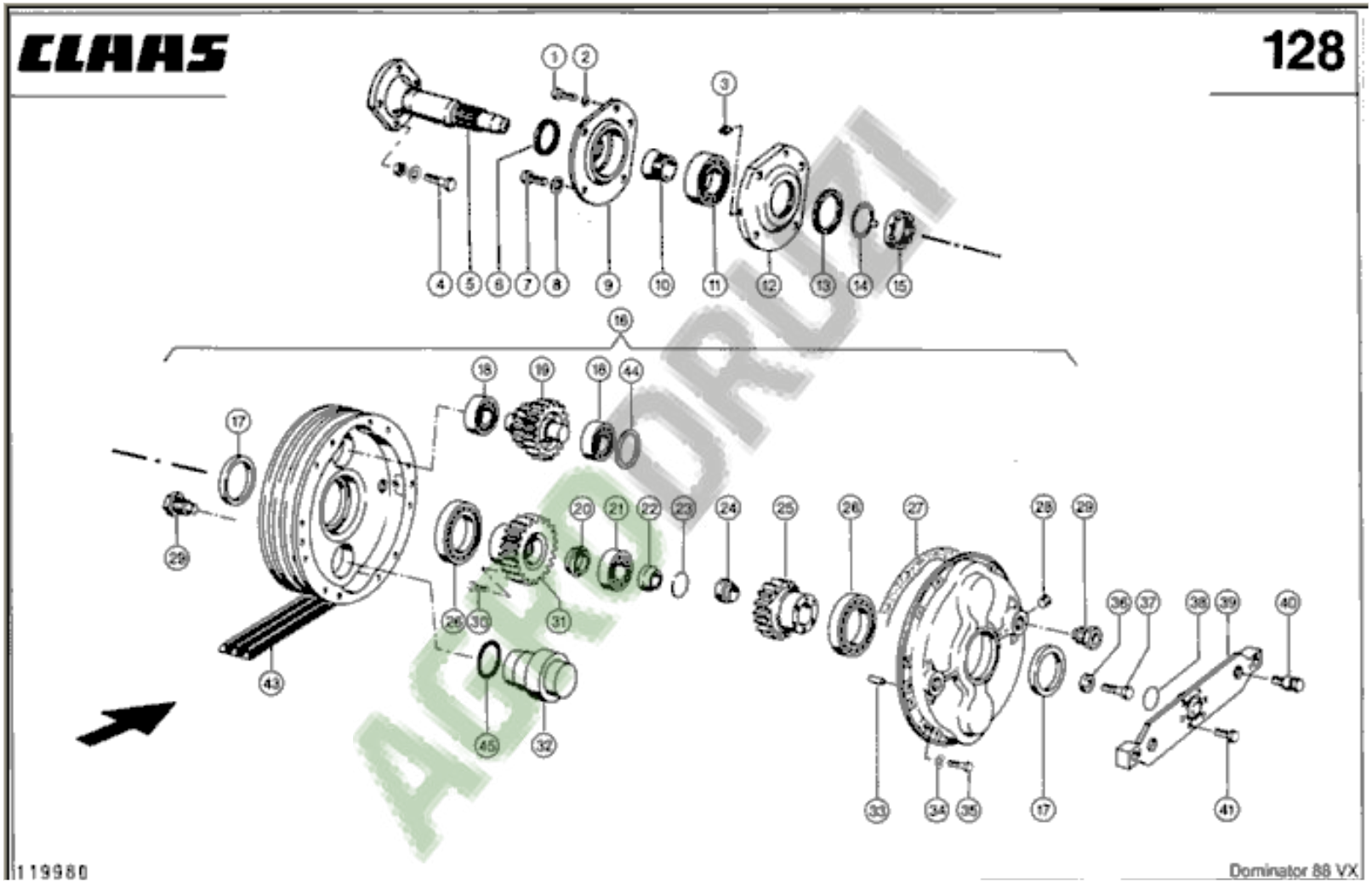
CLAAS
128
119980
Dominator 88 VX

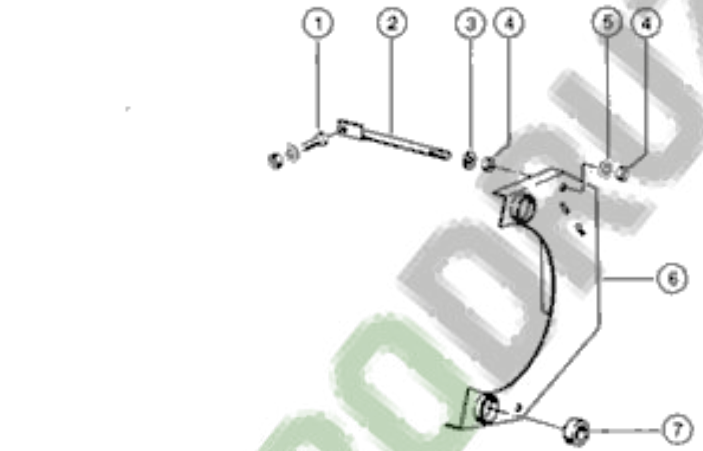


AGRODRUZI

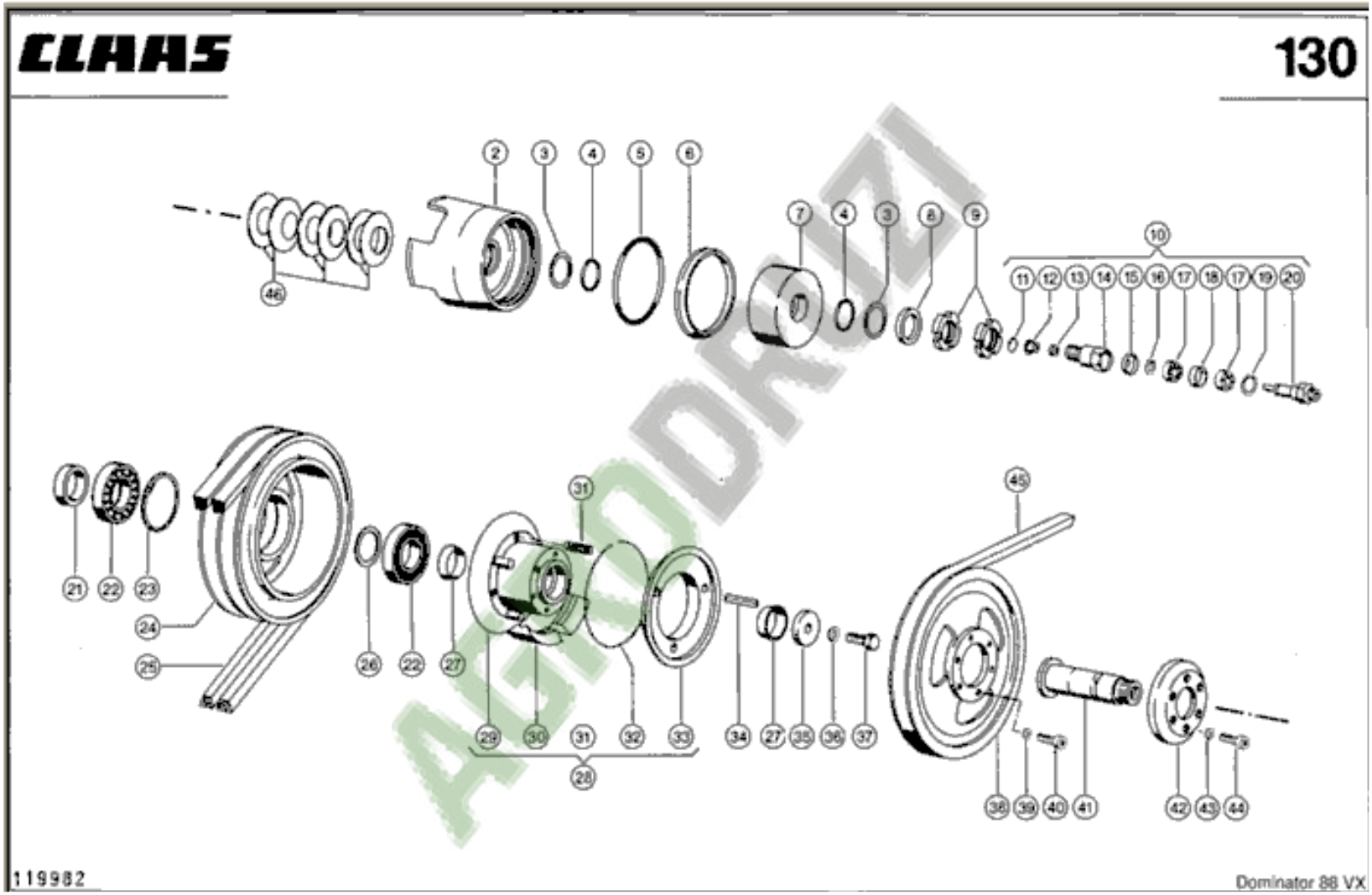
CLAAS
130
119982
Dominator 88 VX

CLAAS

131

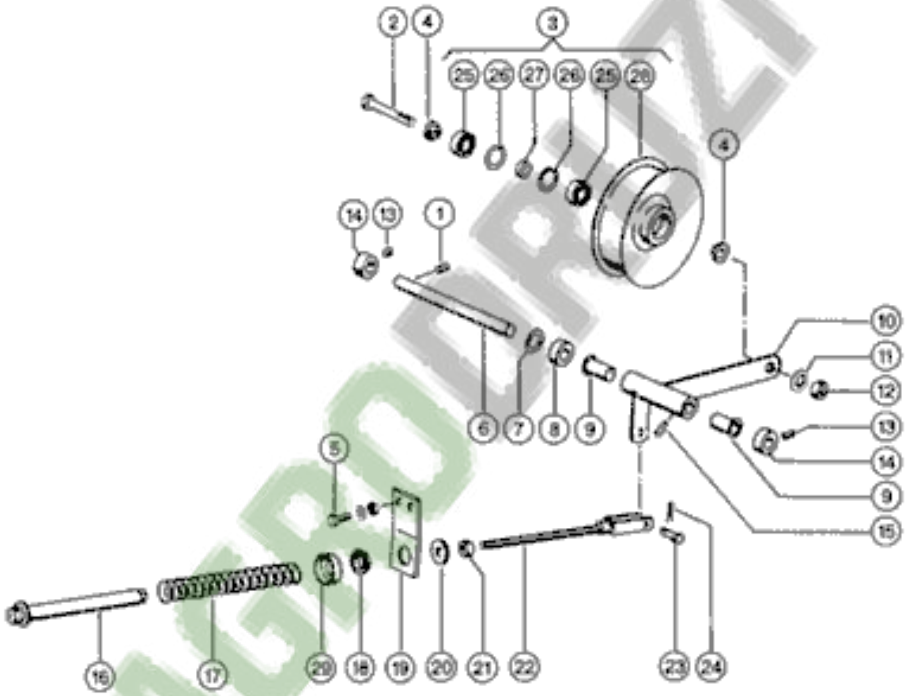


AGRODRIZI

119963

Dominator 88 VX

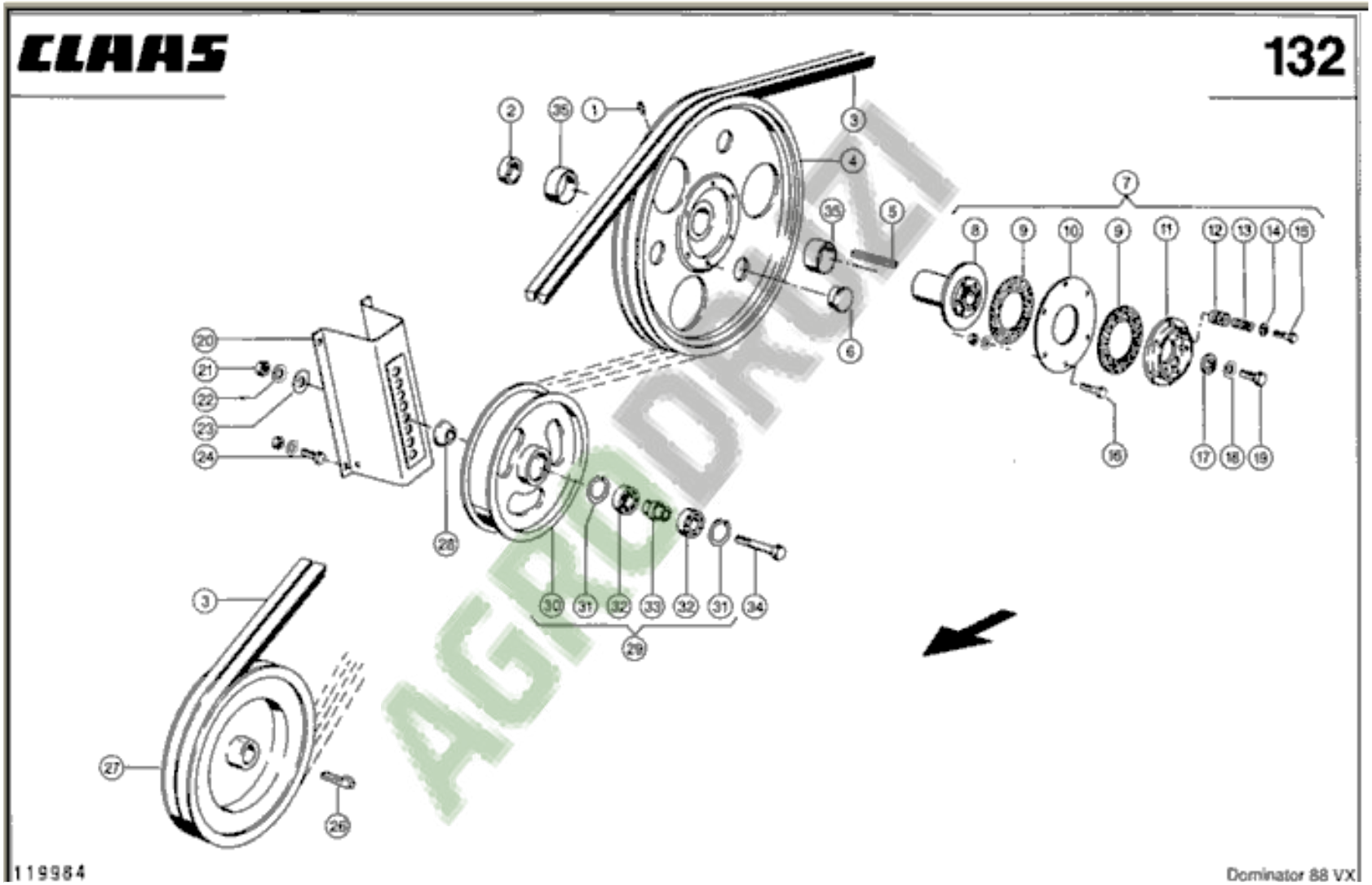


AGRODRUZI

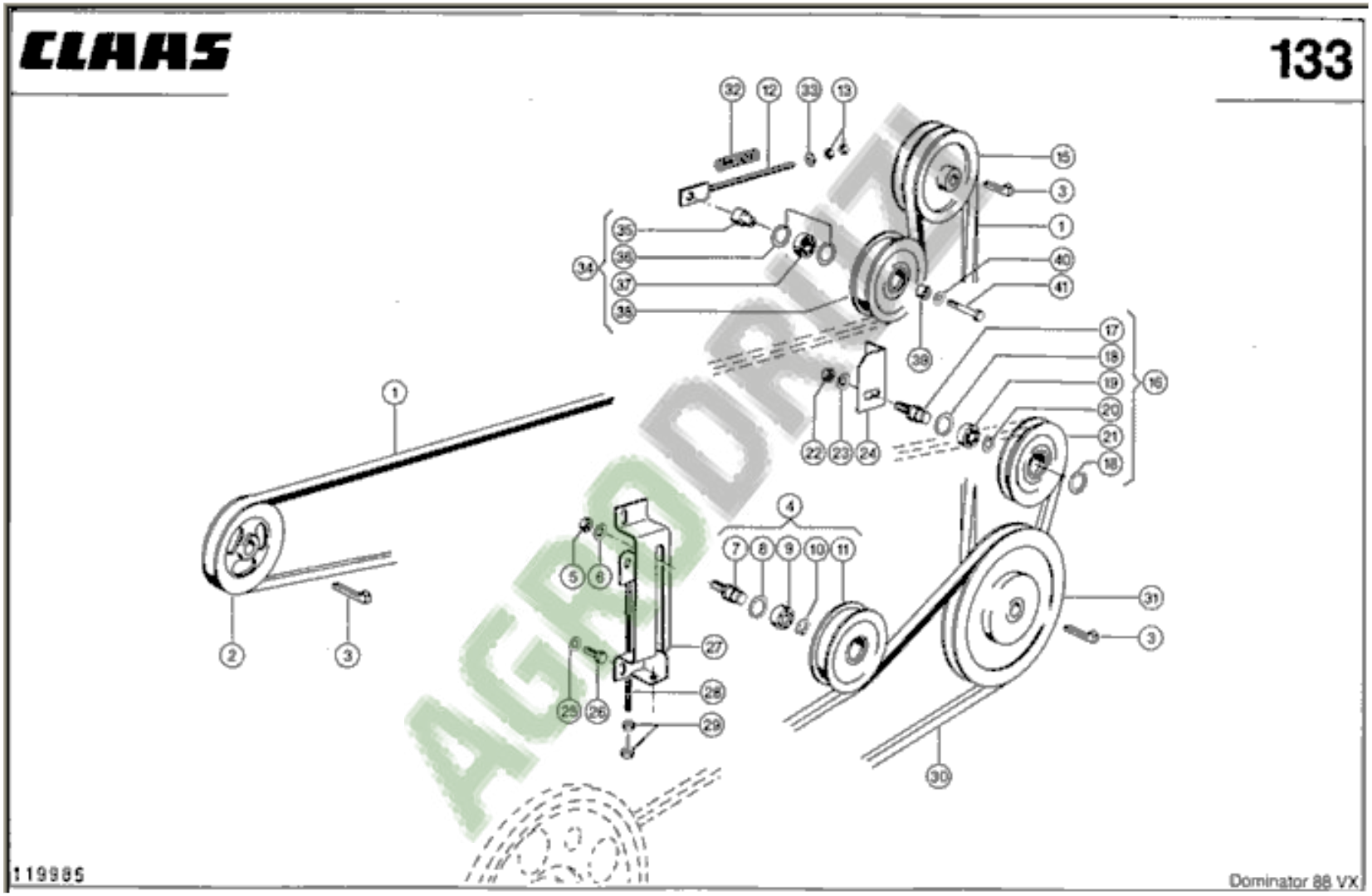
CLAAS
133
119985
Dominator 88 VX

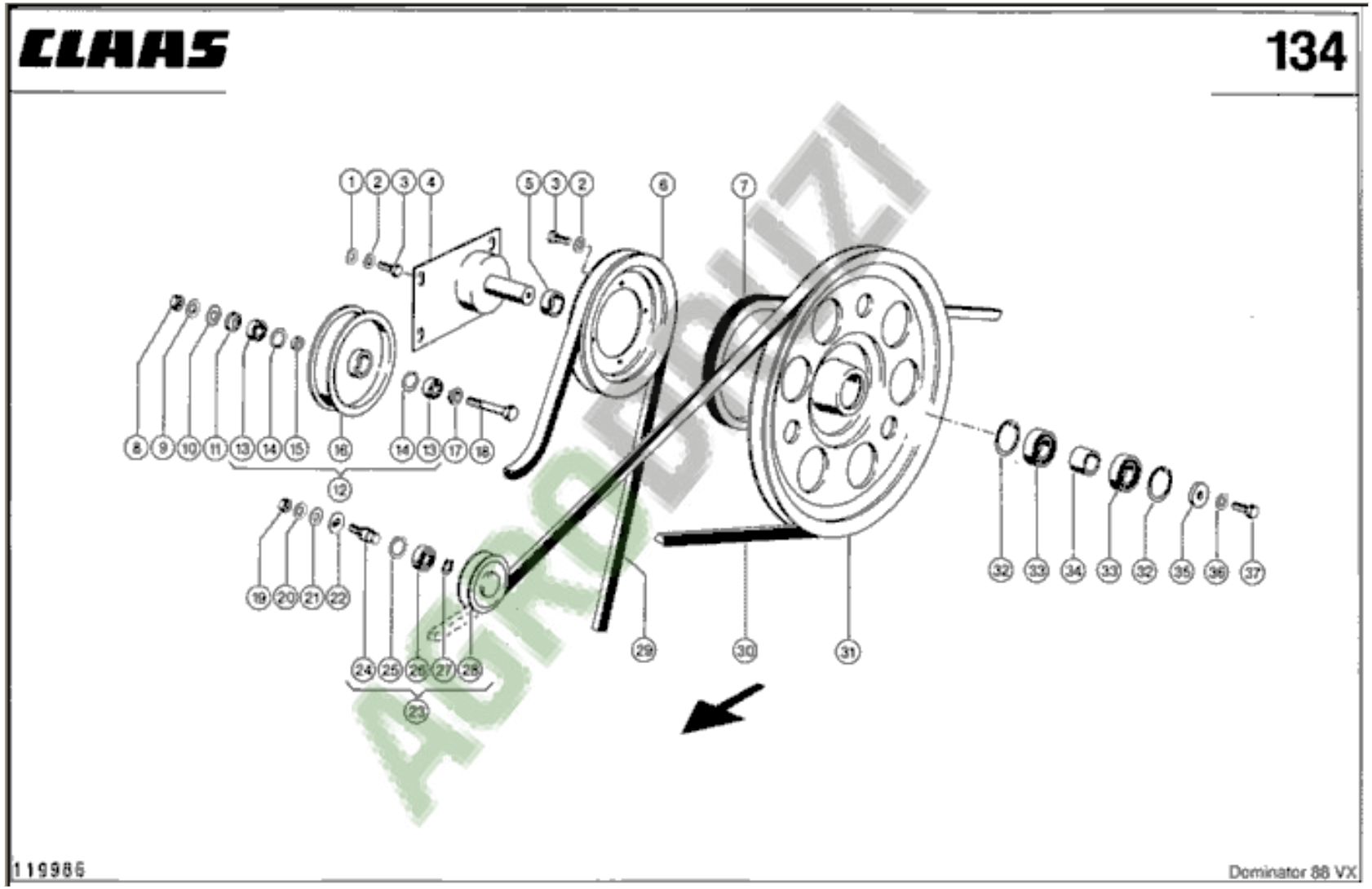
CLAAS
134
119986
Dominator 88 VX

CLAAS

135

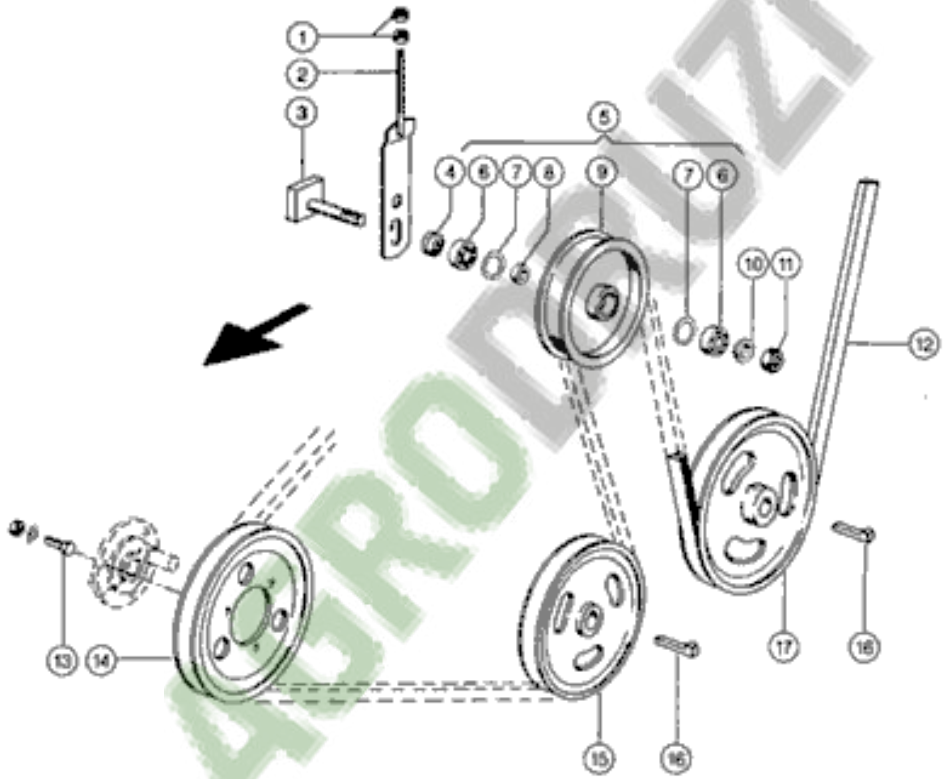


AGRODRUZI

119987

Dominator 88 VX

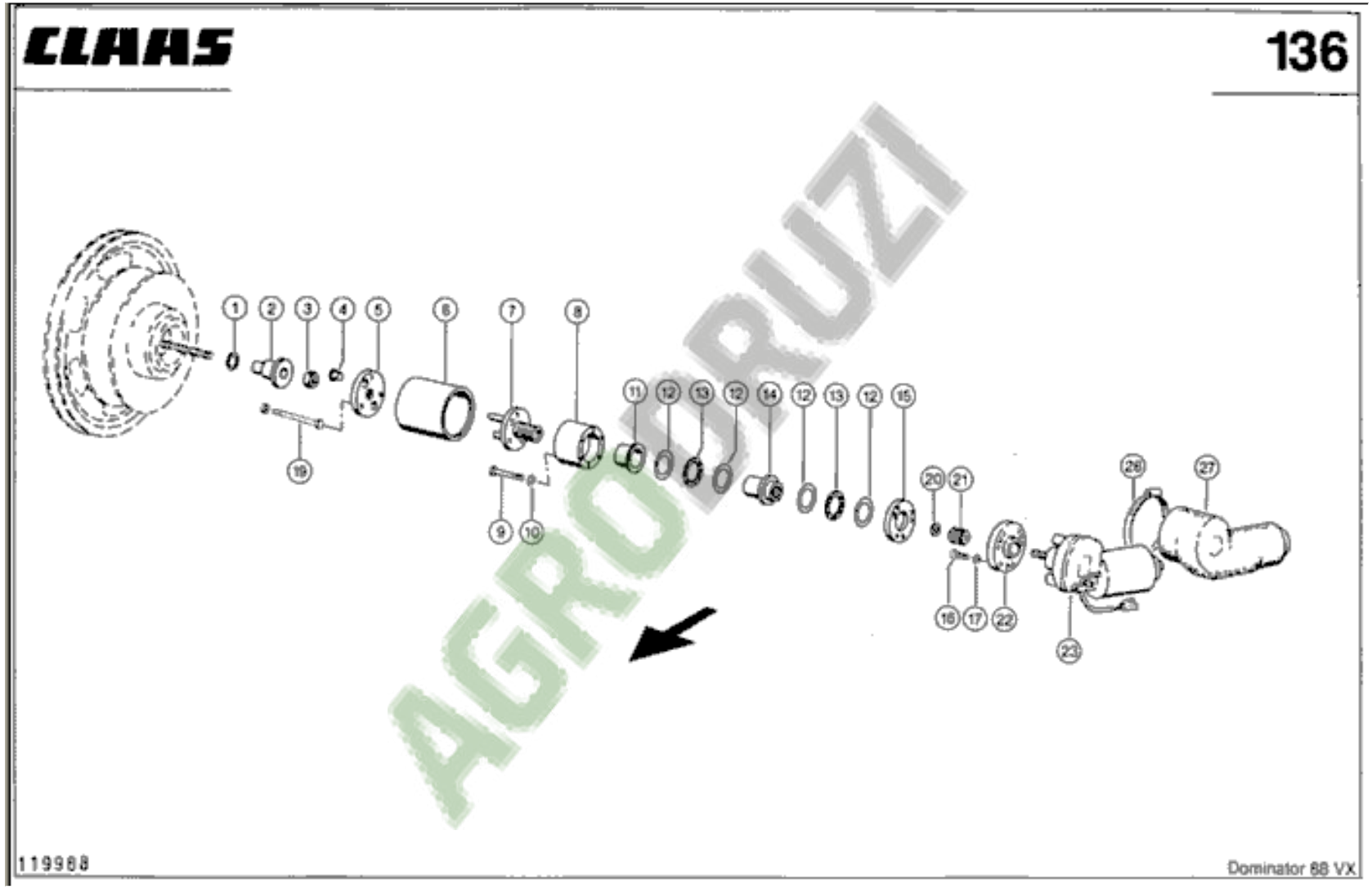
CLAAS
136
1
2
3
4
5
6
7
8
9
10
11
12
13
12
14
12
13
12
15
16
17
18
19
20
21
22
23
26
27
119988
Dominator 88 VX

AGRODRUZI

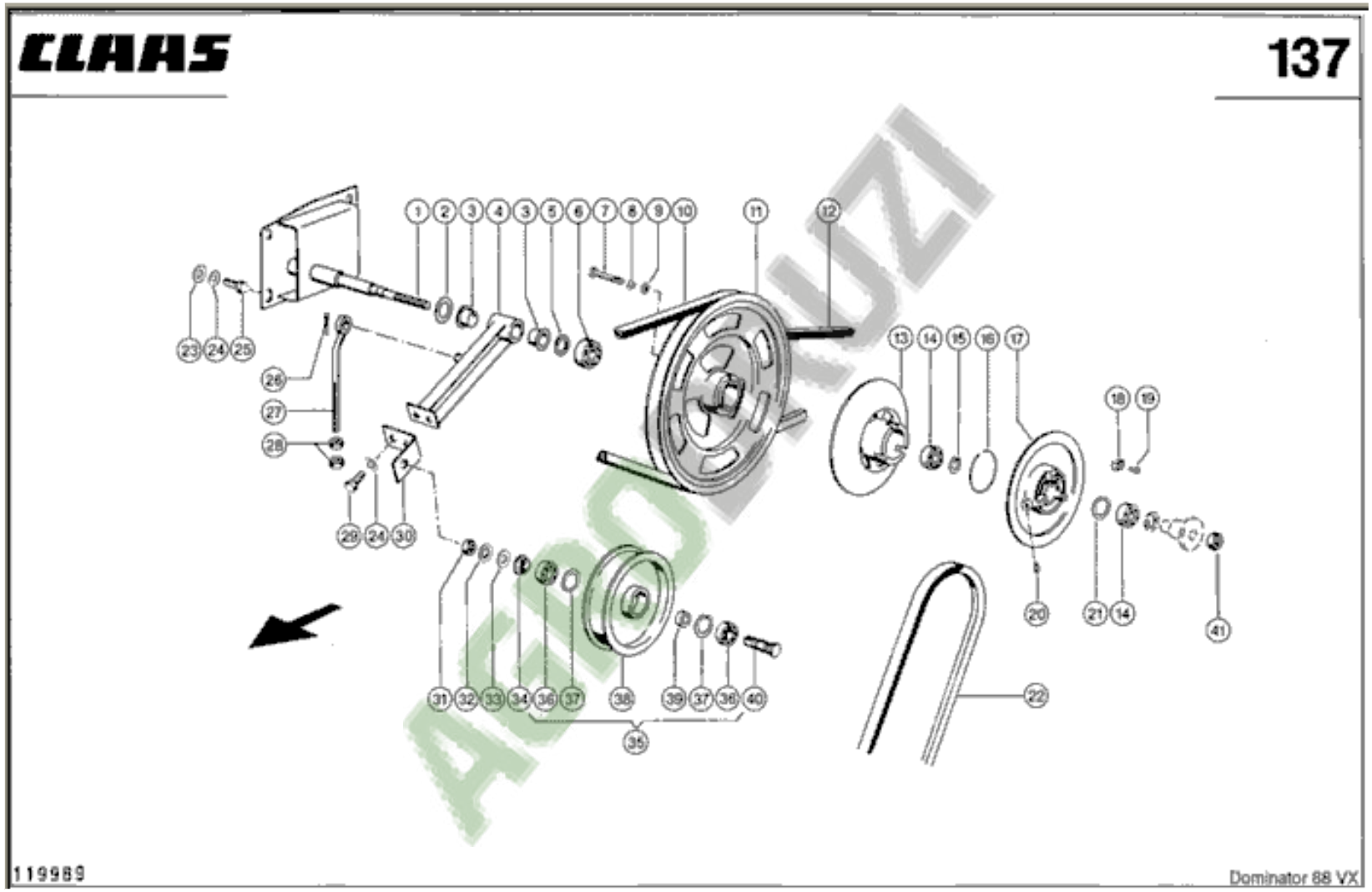
CLAAS
137
119969
Dominator 88 VX

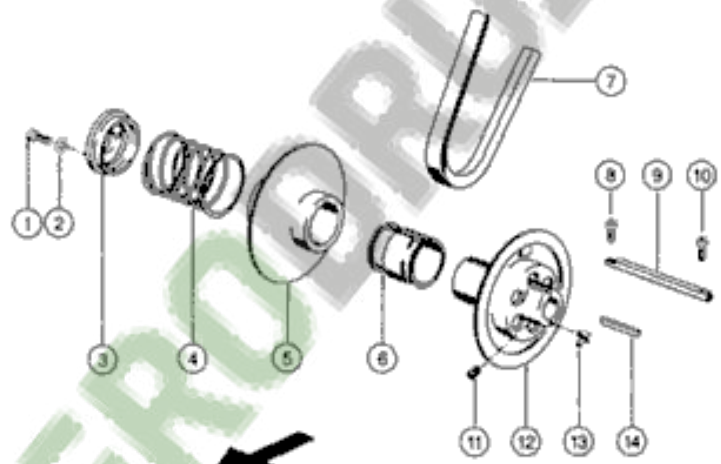


AGRODRUZI

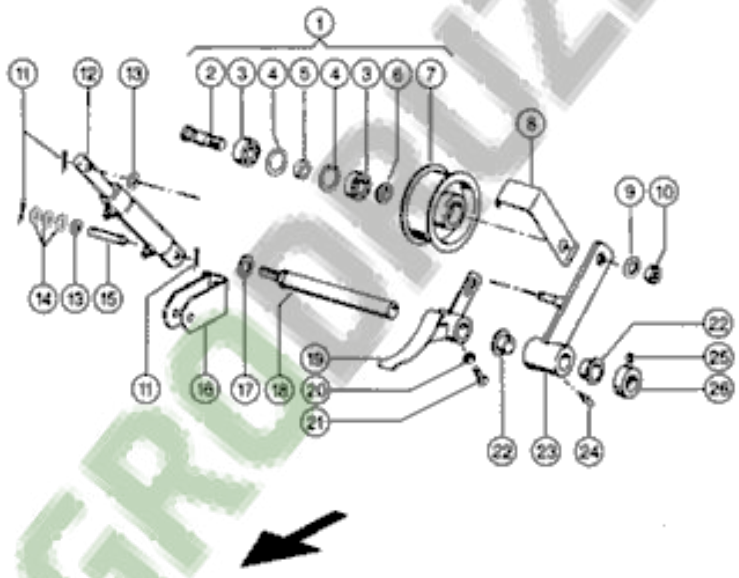
1
2
3
4
5
4
3
6
7
8
9
10
11
12
13
14
13
15
11
16
17
18
19
20
21
22
23
24
22
25
26

AGRODRUZI

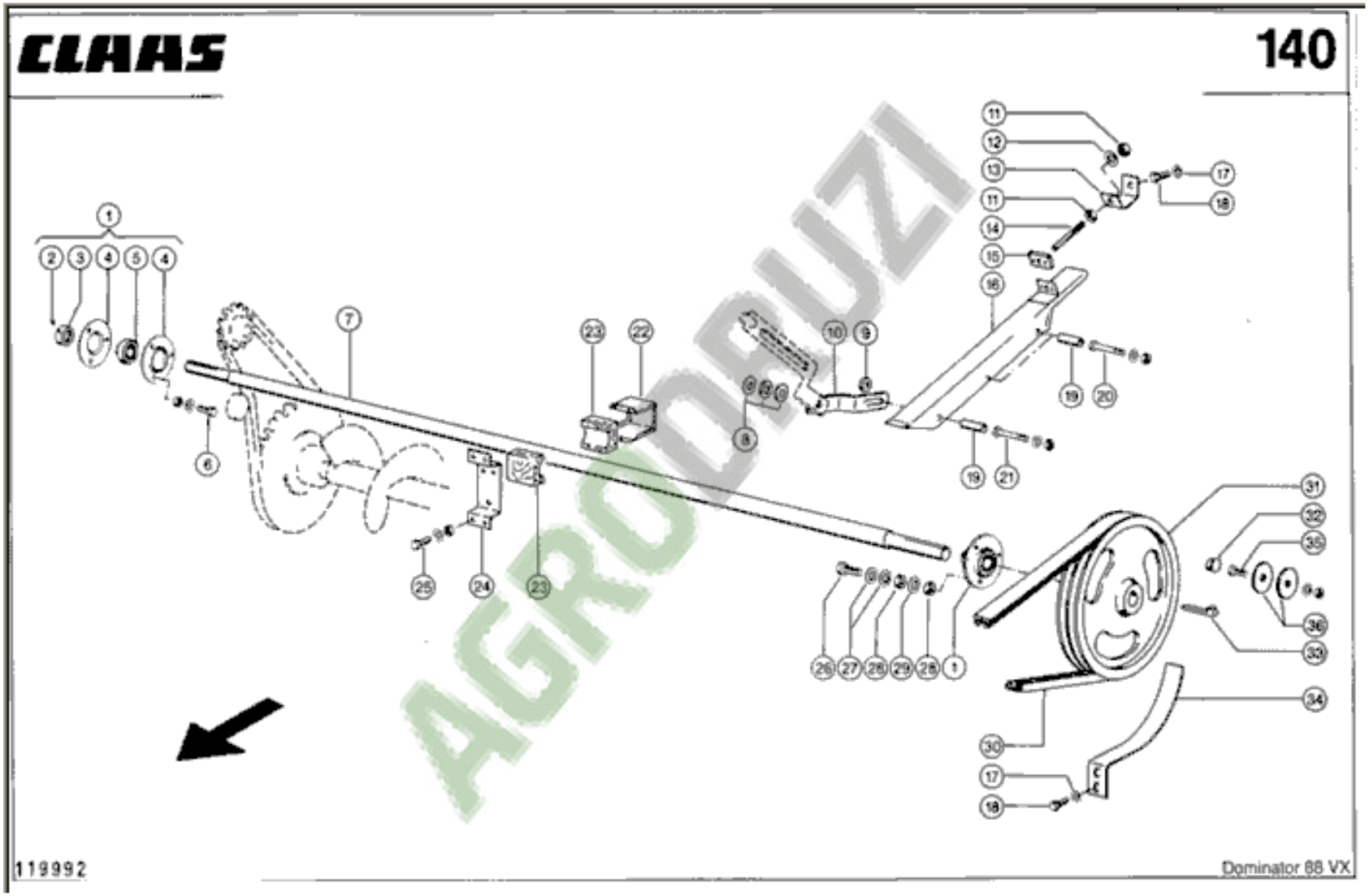
CLAAS
140
119992
Dominator 88 VX

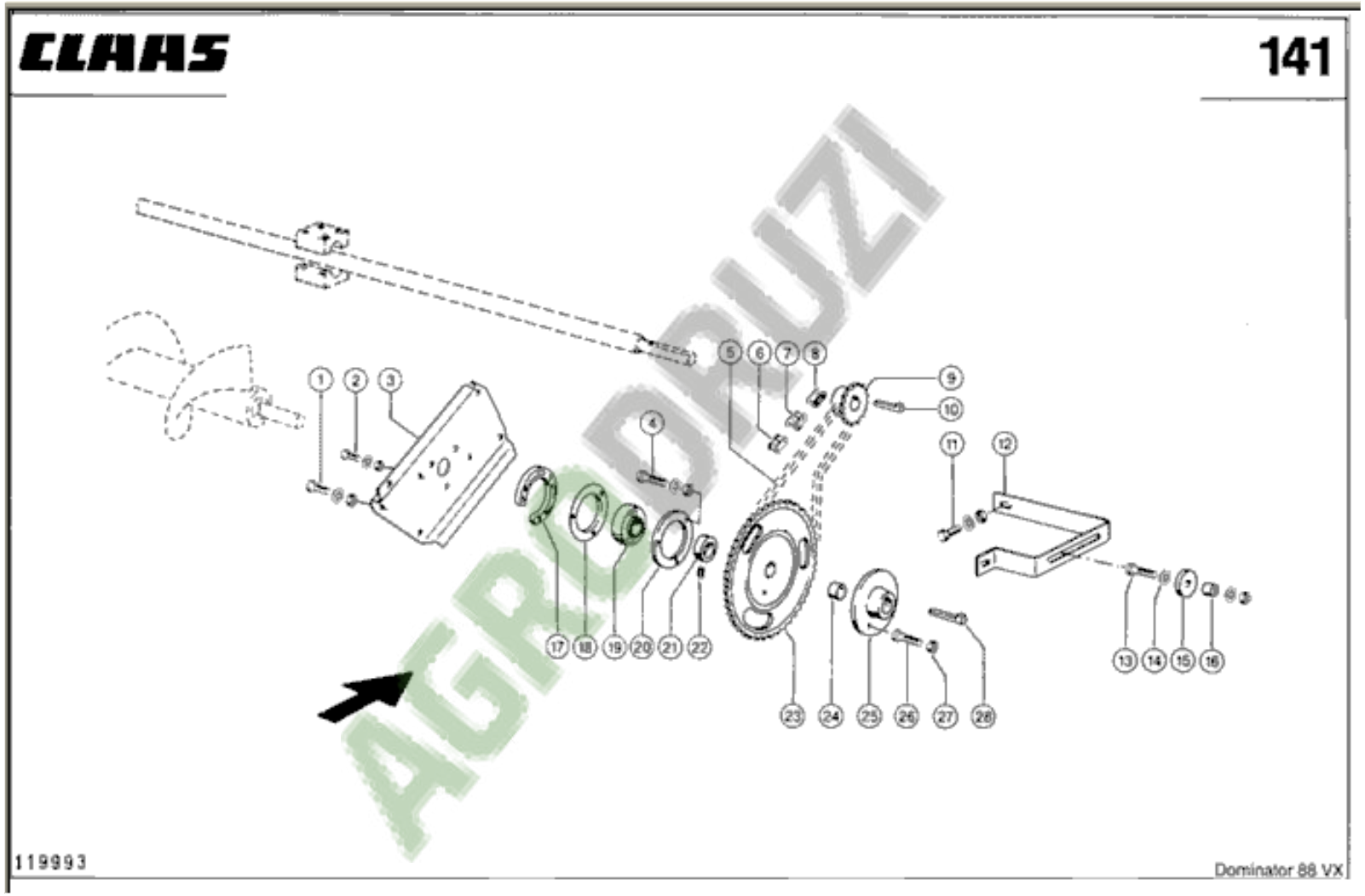
CLAAS
141
1
2
3
4
5
6
7
8
9
10
11
12
13
14
15
16
17
18
19
20
21
22
23
24
25
26
27
28
119993
Dominator 88 VX

AGRODRUZI

CLAAS

142

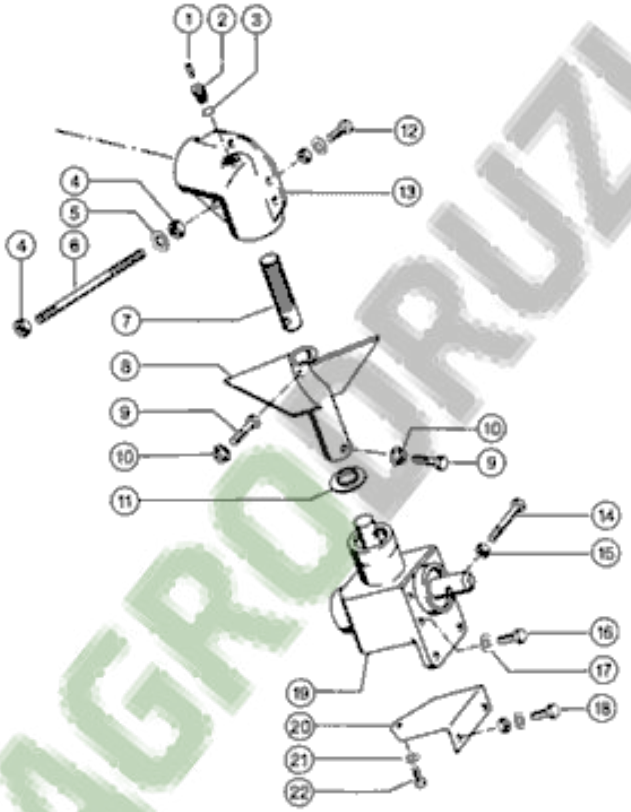


AGRODRUZI

119994

Dominator 88 VX

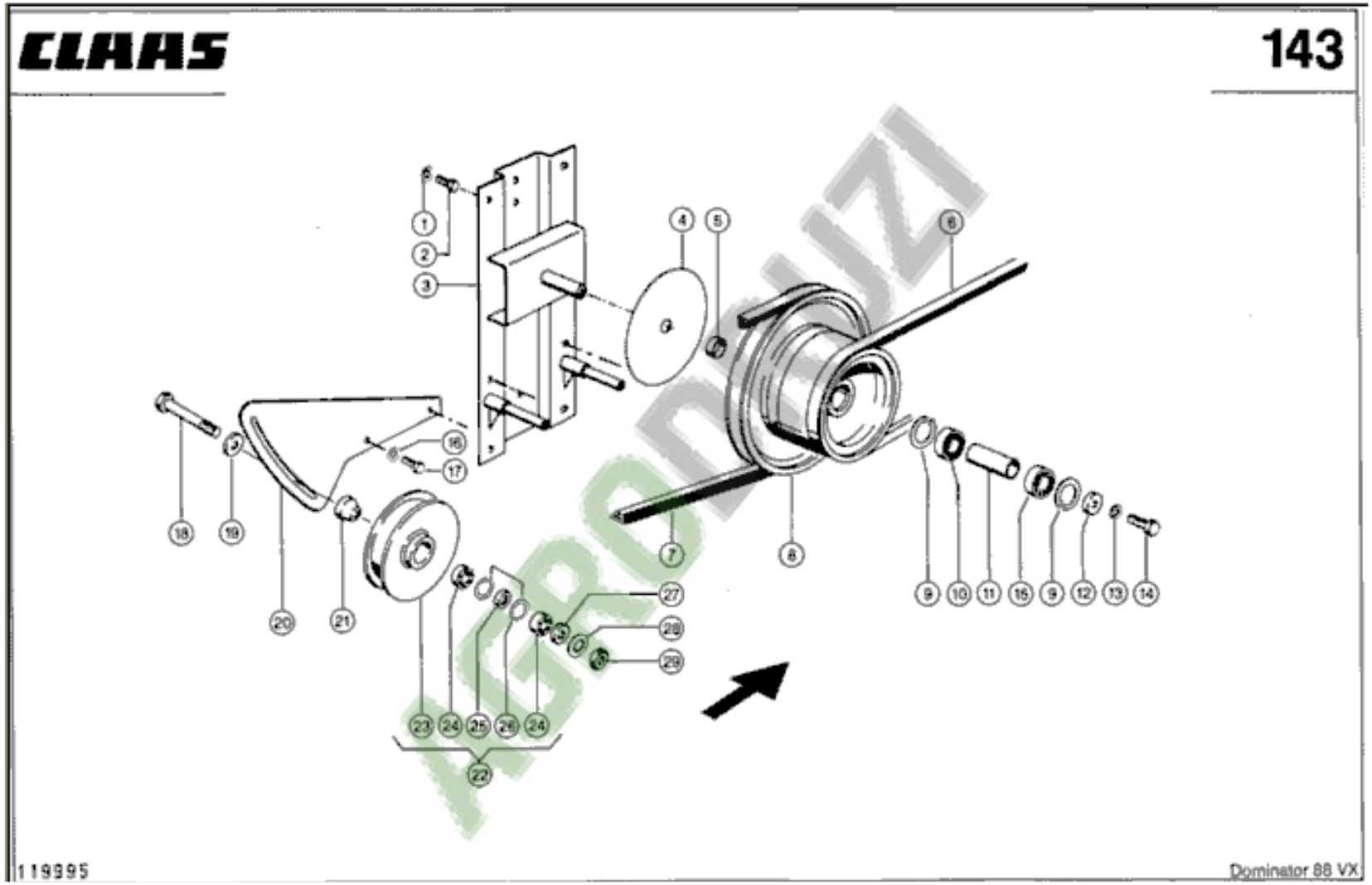
CLAAS
143
1
2
3
4
5
6
7
8
9
10
11
12
13
14
15
16
17
18
19
20
21
22
23
24
25
26
27
28
29
119995
Dominator 88 VX

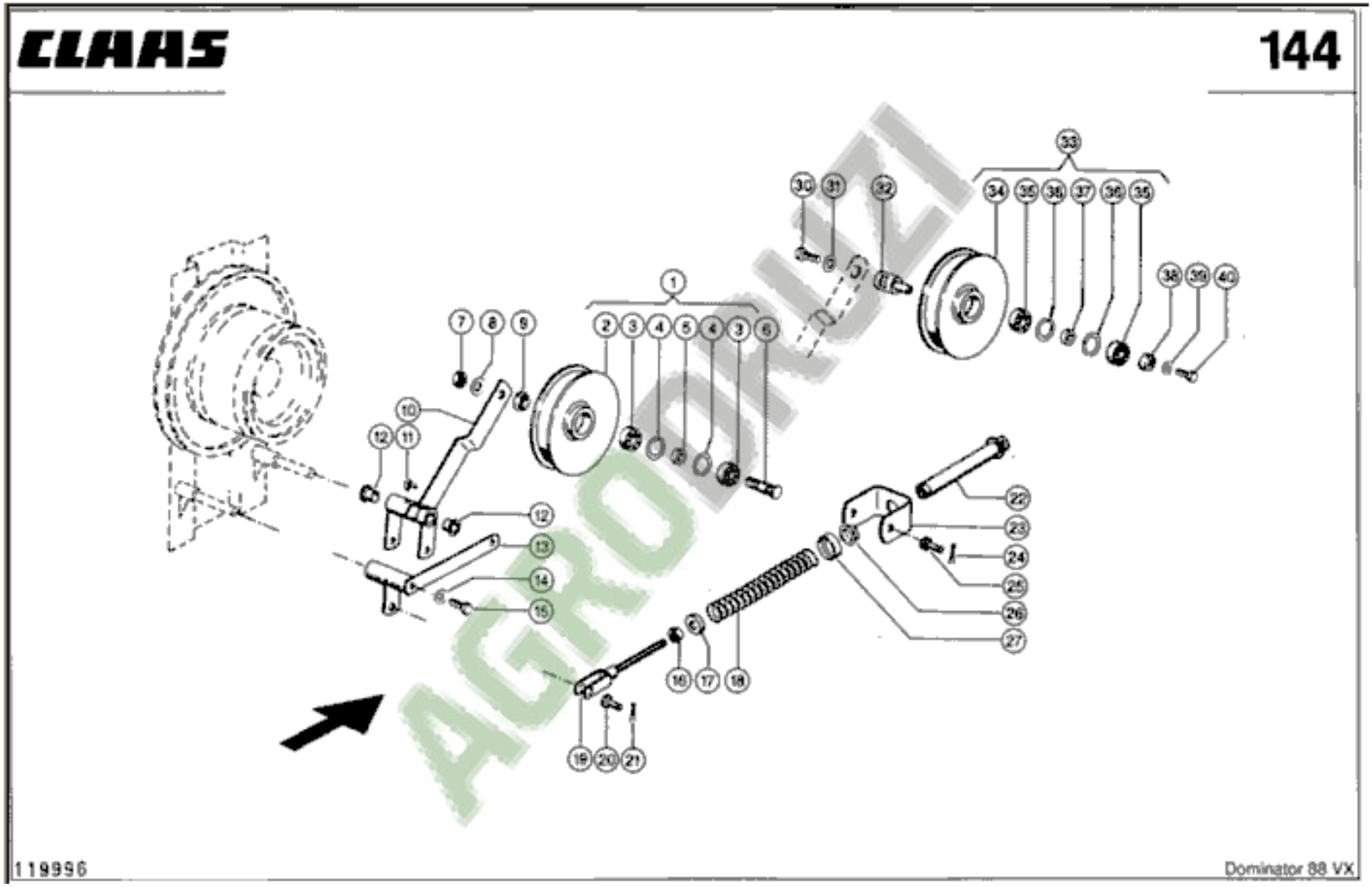
CLAAS
144
119996
Dominator 88 VX

CLAAS

145

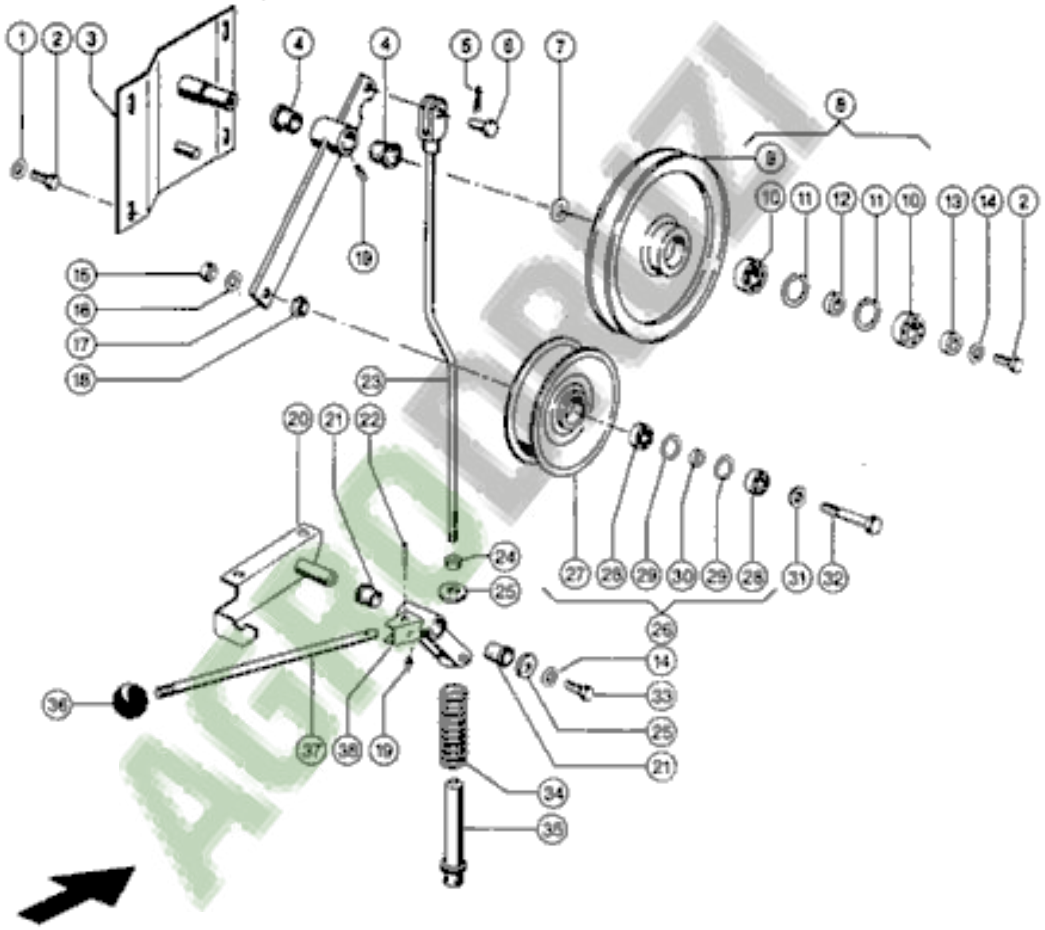


119997

Dominator 88 VX

AGRODRIZI

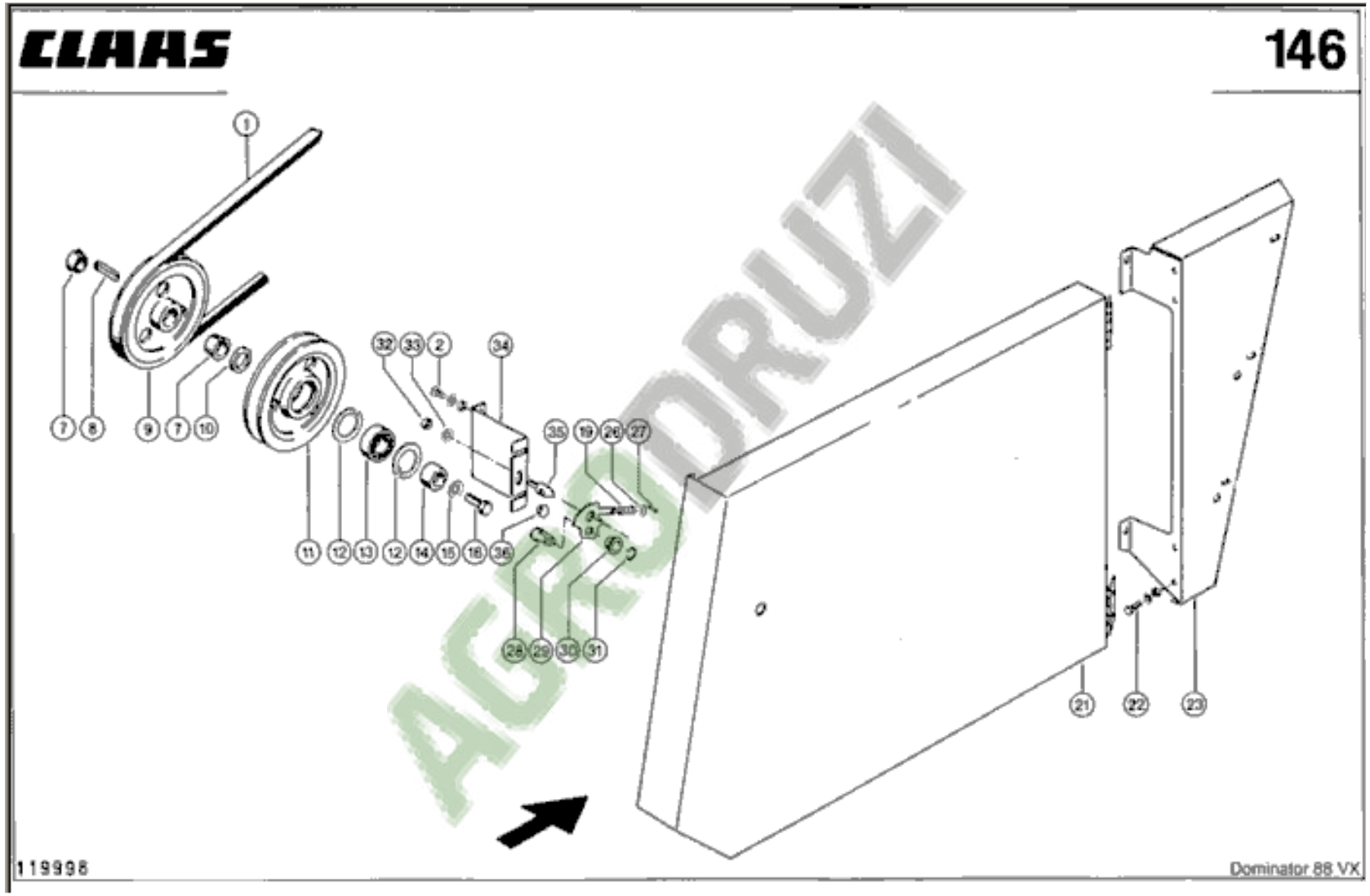
CLAAS
146
1
7
8
9
7
10
32
33
2
34
35
19
26
27
11
12
13
12
14
15
16
36
28
29
30
31
21
22
23
119998
Dominator 88 VX
AGRODRUZI

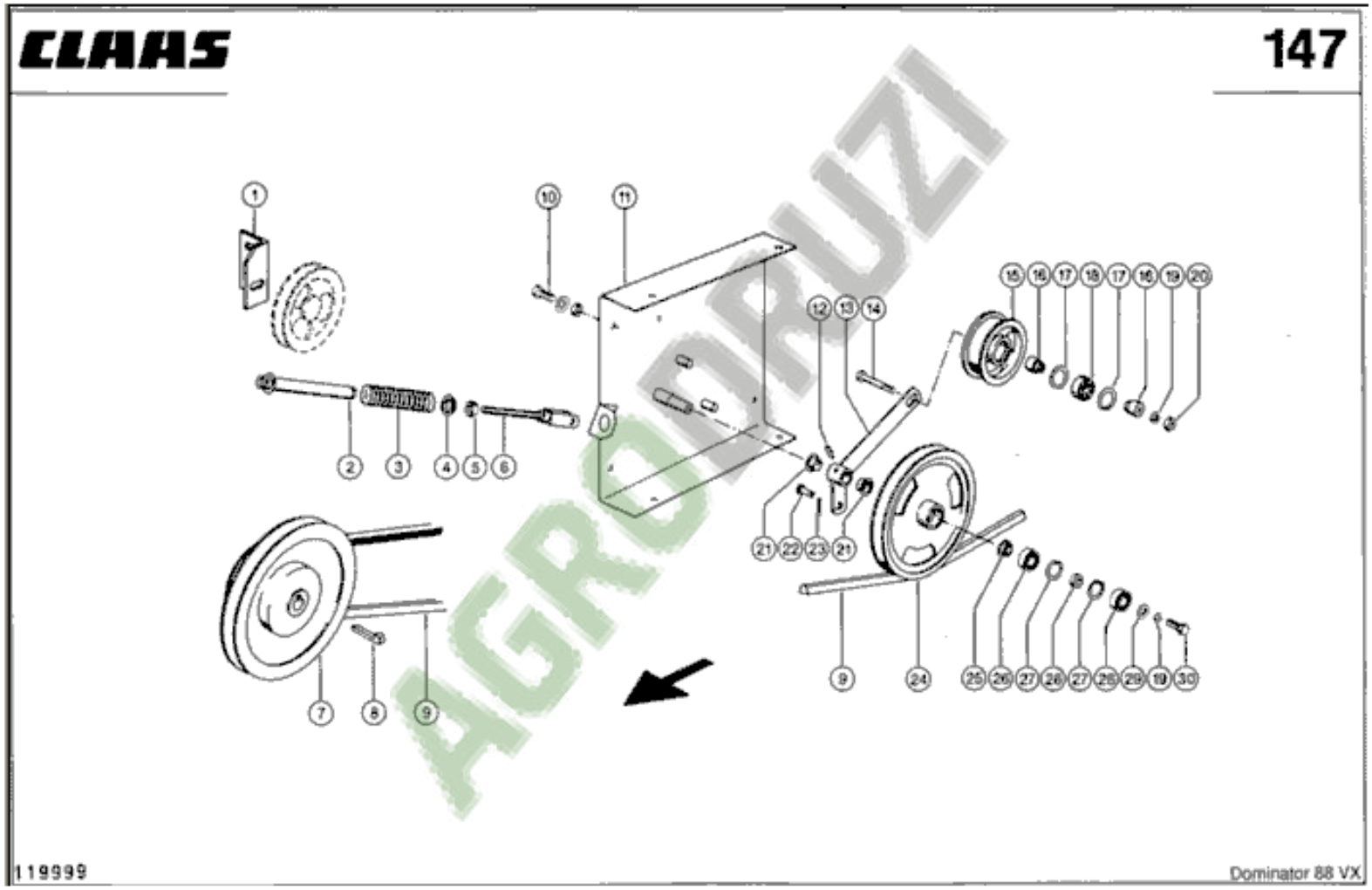


AGRODRUZI

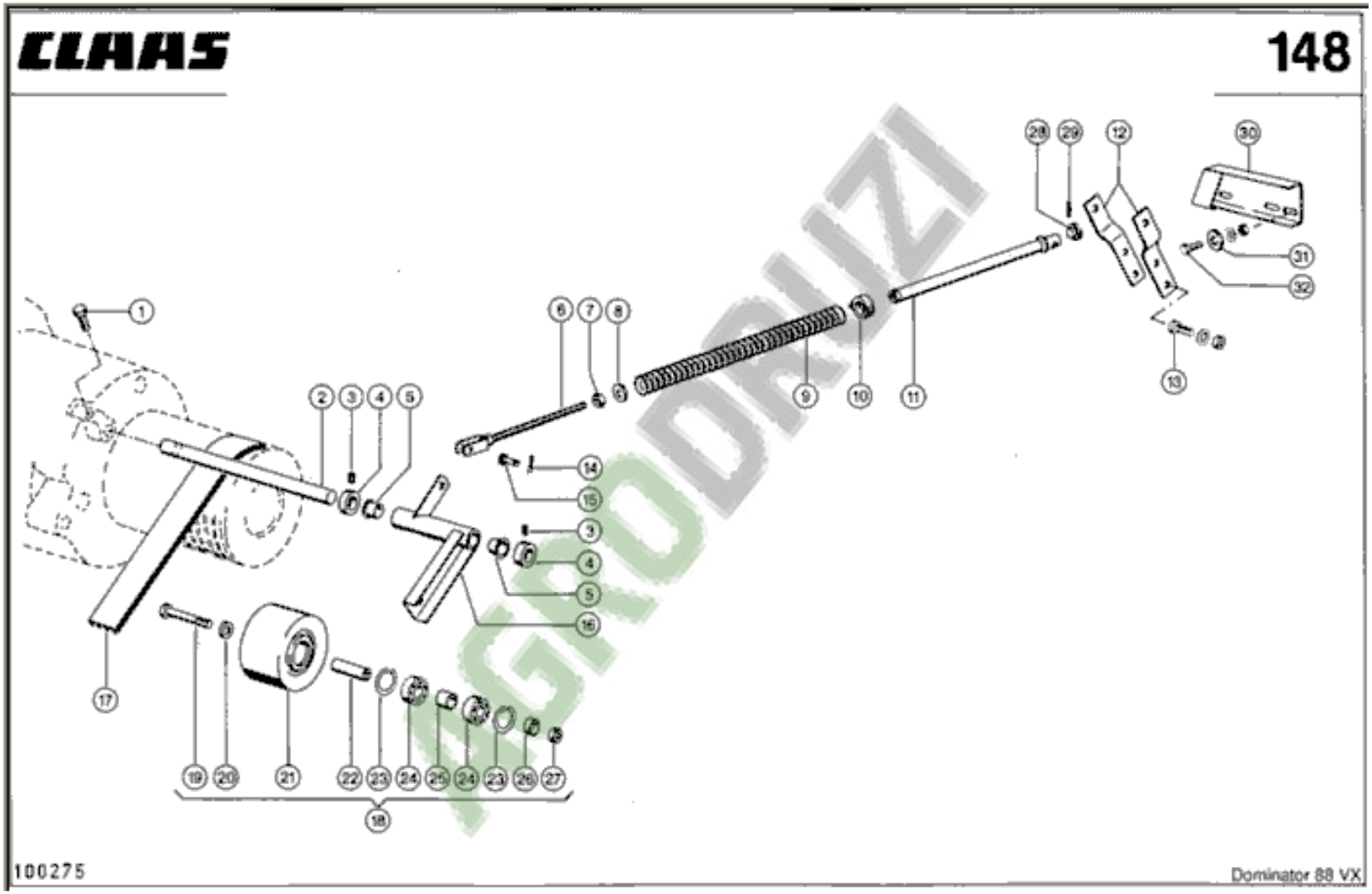
CLAAS
148
100275
Dominator 88 VX

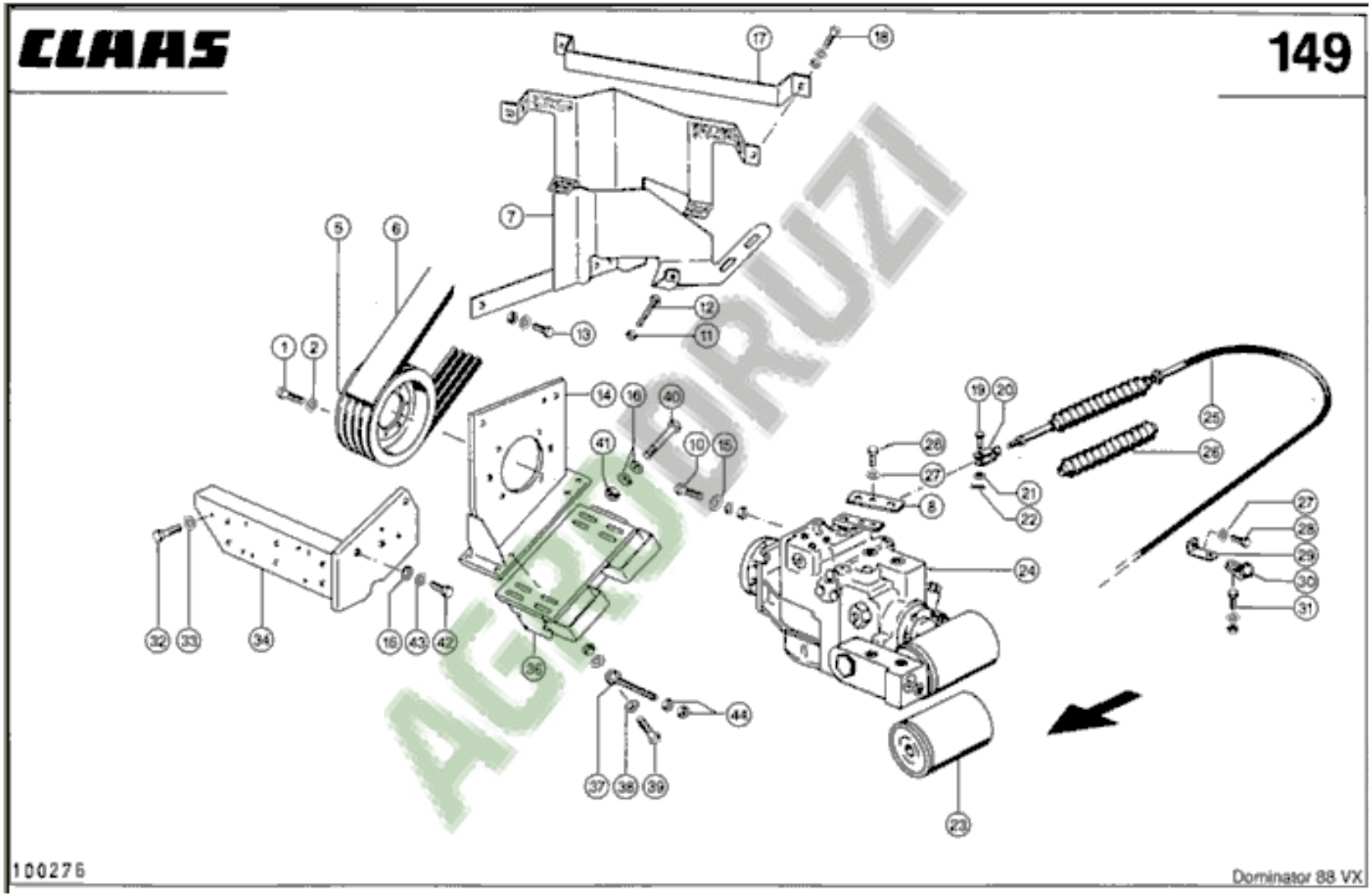
CLAAS
149
100276
Dominator 88 VX

CLAAS

## hydrostatischer Fahrantrieb SAUER

150

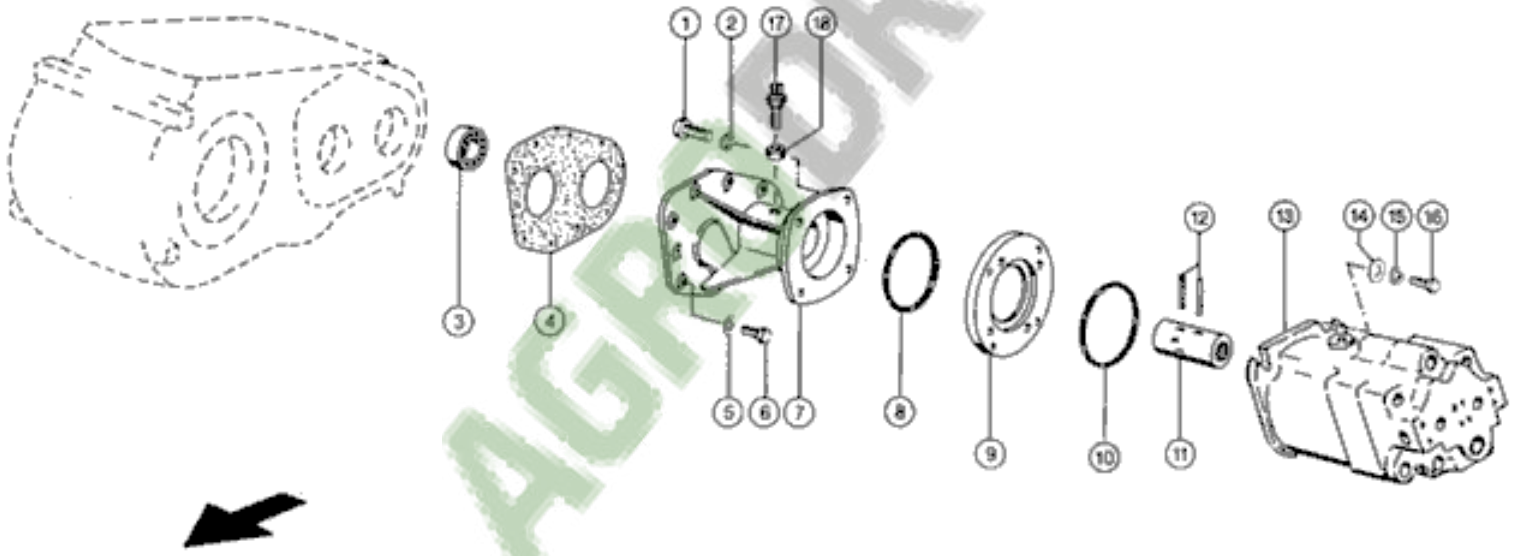


AGRODRUZI

100277

Dominator 88 VX

CLAAS

151

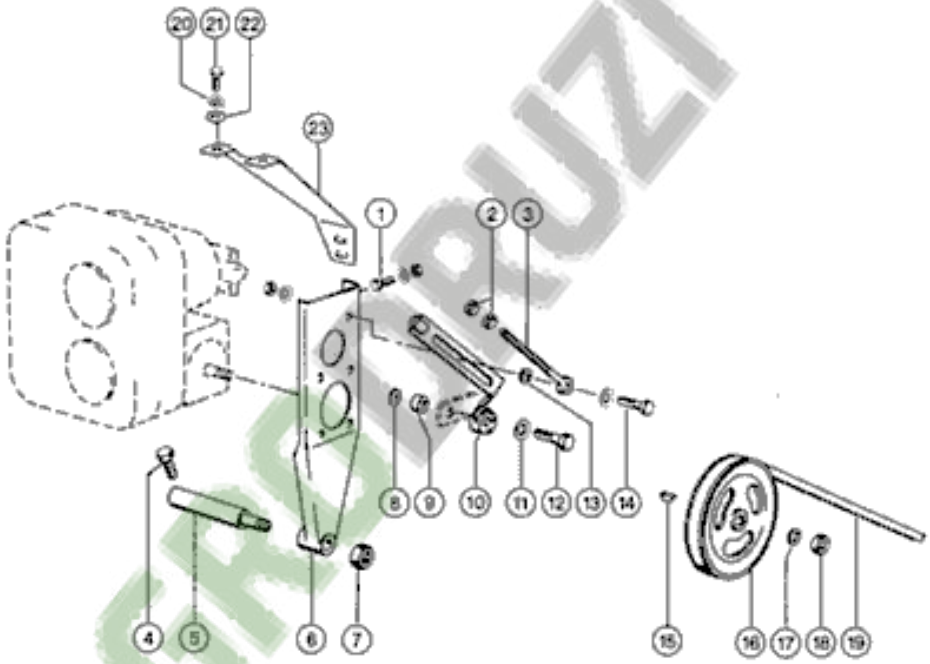


AGROPRUZI

100278

Dominator 88 VX

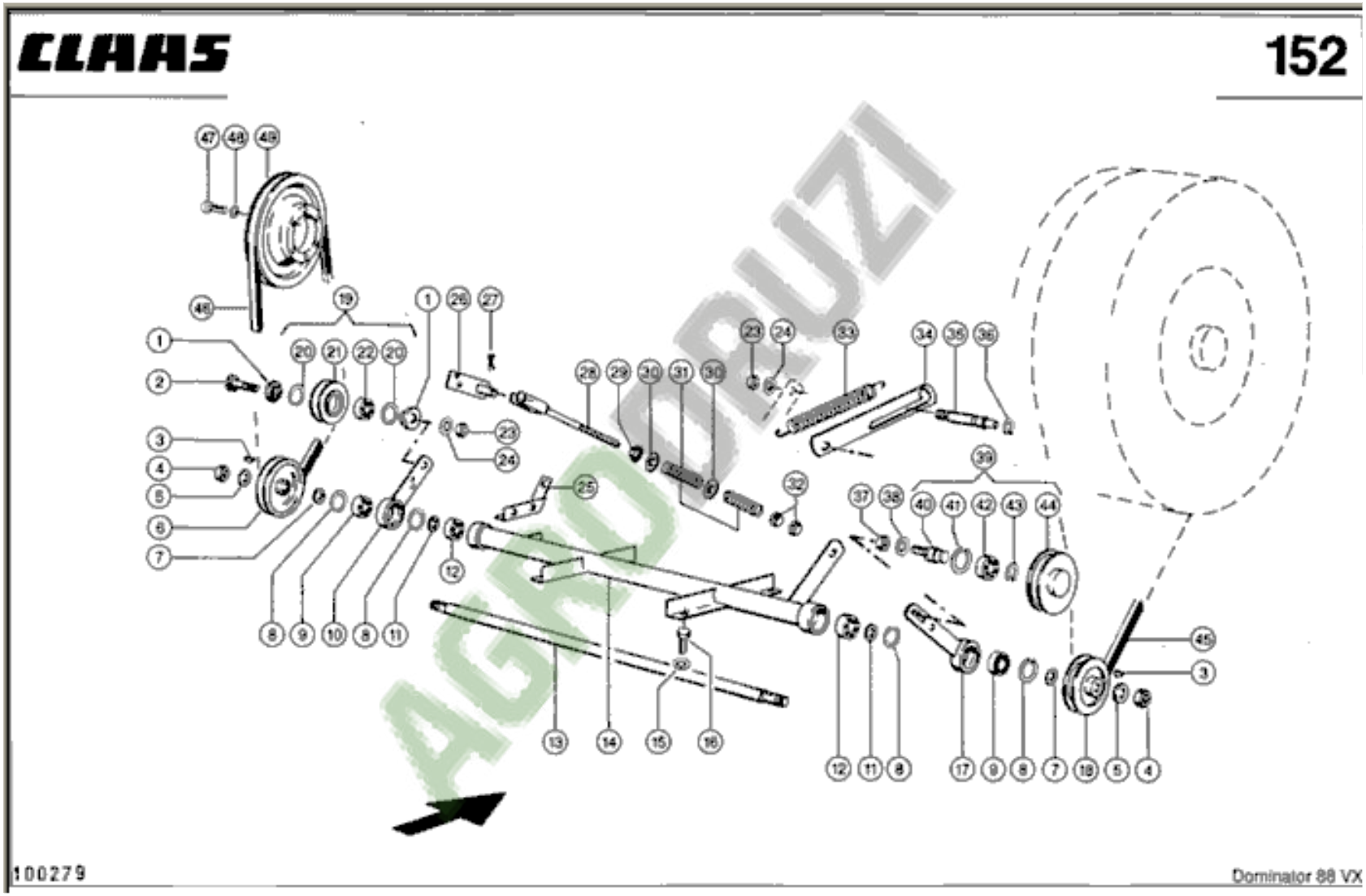
47 48 49
46
19
1 26 27
1
2
20 21 22 20
3
4
5
6
7
8 9 10 8 11
12
23 24
28 29 30 31 30
25
32
33
34 35 36
39
37 38 40 41 42 43 44
13 14 15 16
12 11 8 17 9 8 7 18 5 4
45
3

AGRODRUZI

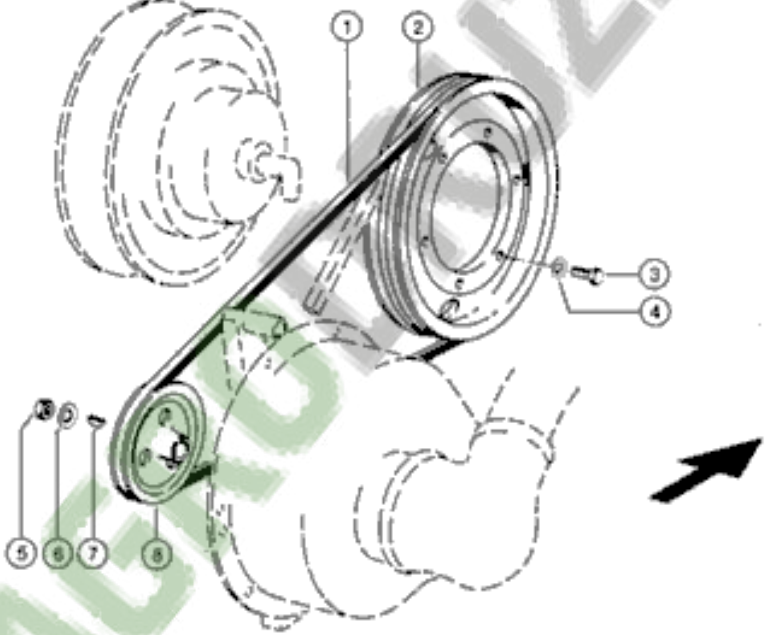


AGROMIZI

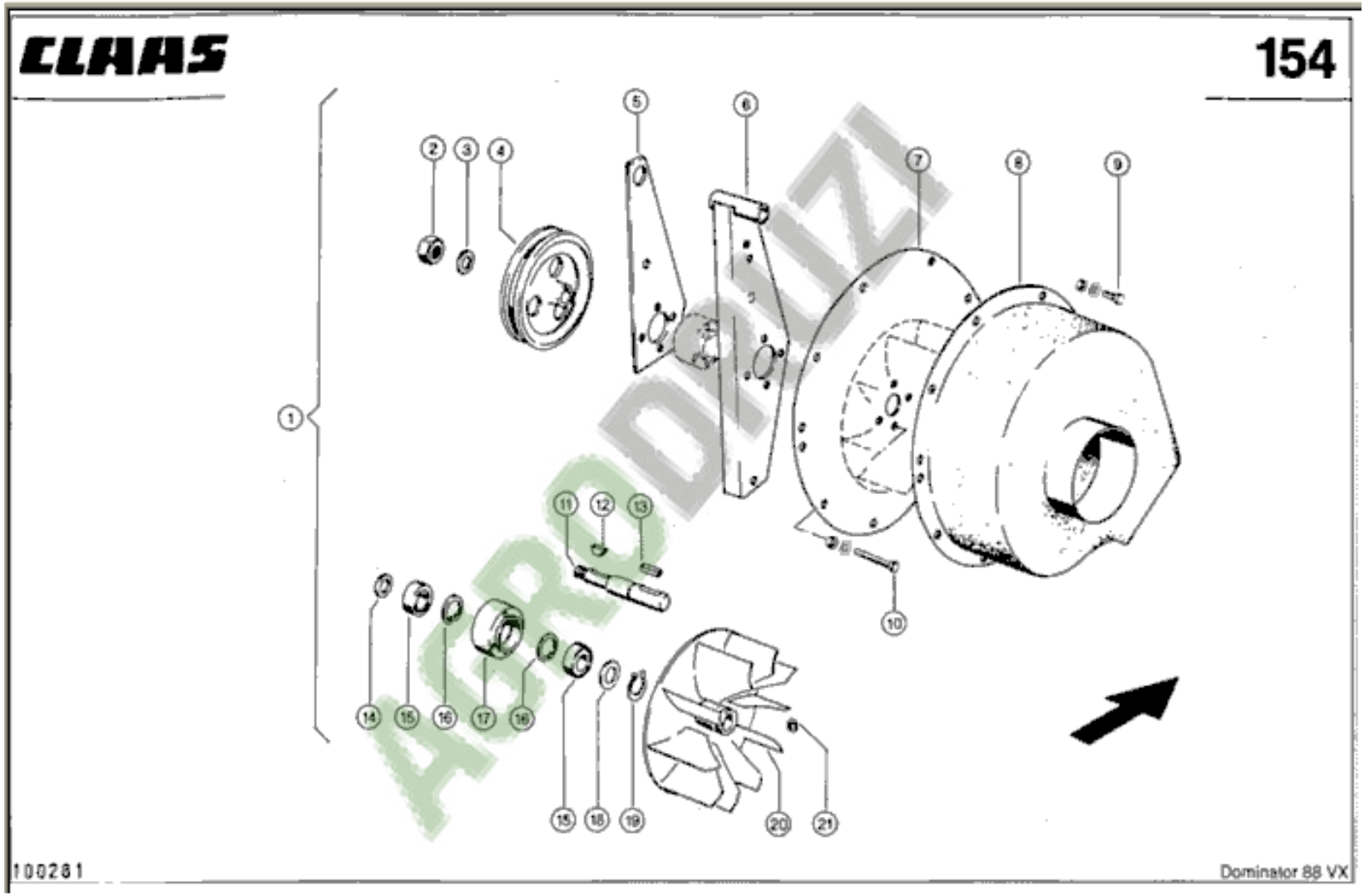
CLAAS
154
1
2
3
4
5
6
7
8
9
10
11
12
13
14
15
16
17
18
19
20
21
100281
Dominator 88 VX

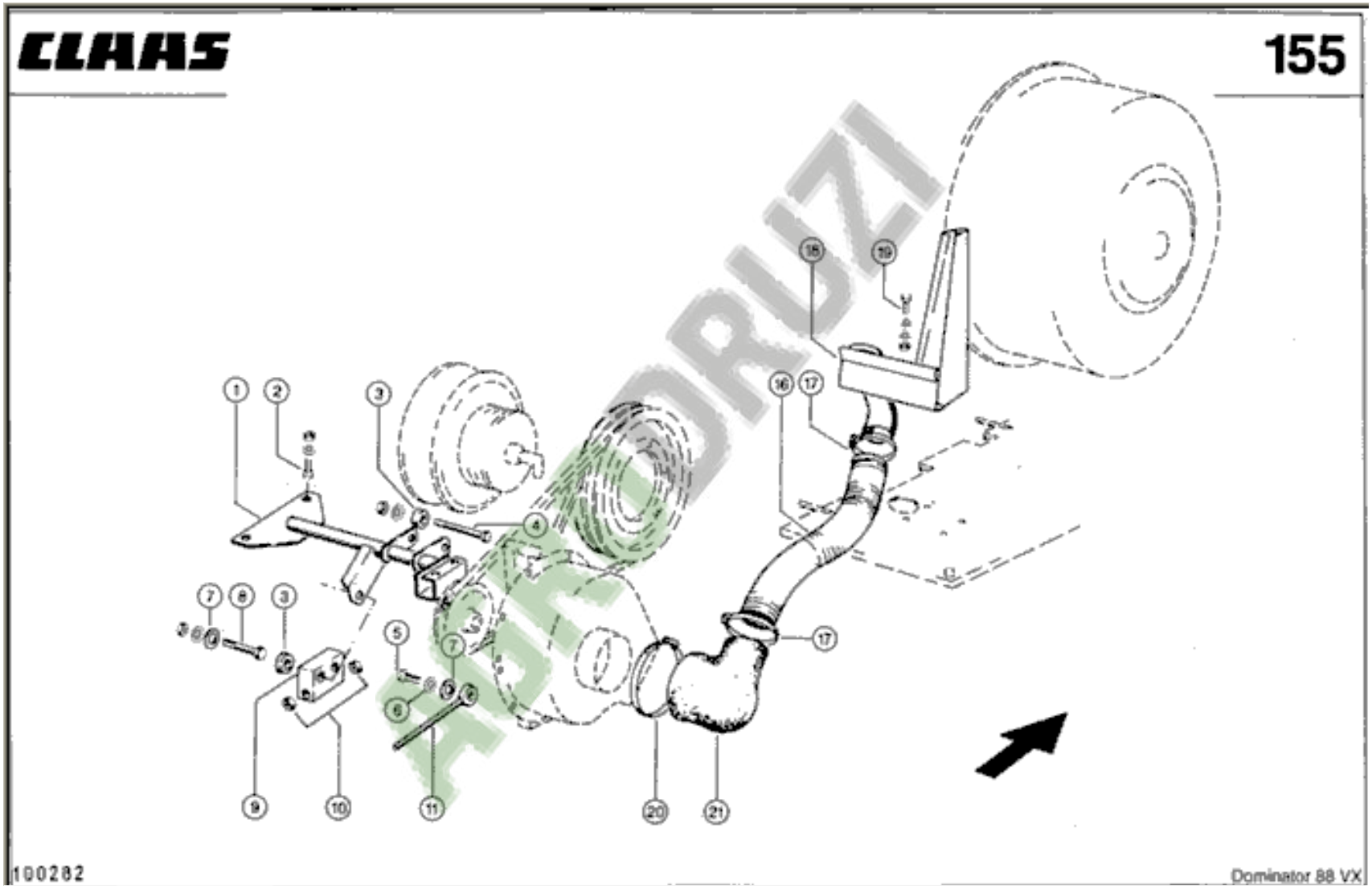
CLAAS
155
1
2
3
4
5
6
7
8
9
10
11
15
16
17
18
19
20
21
100282
Dominator 88 VX

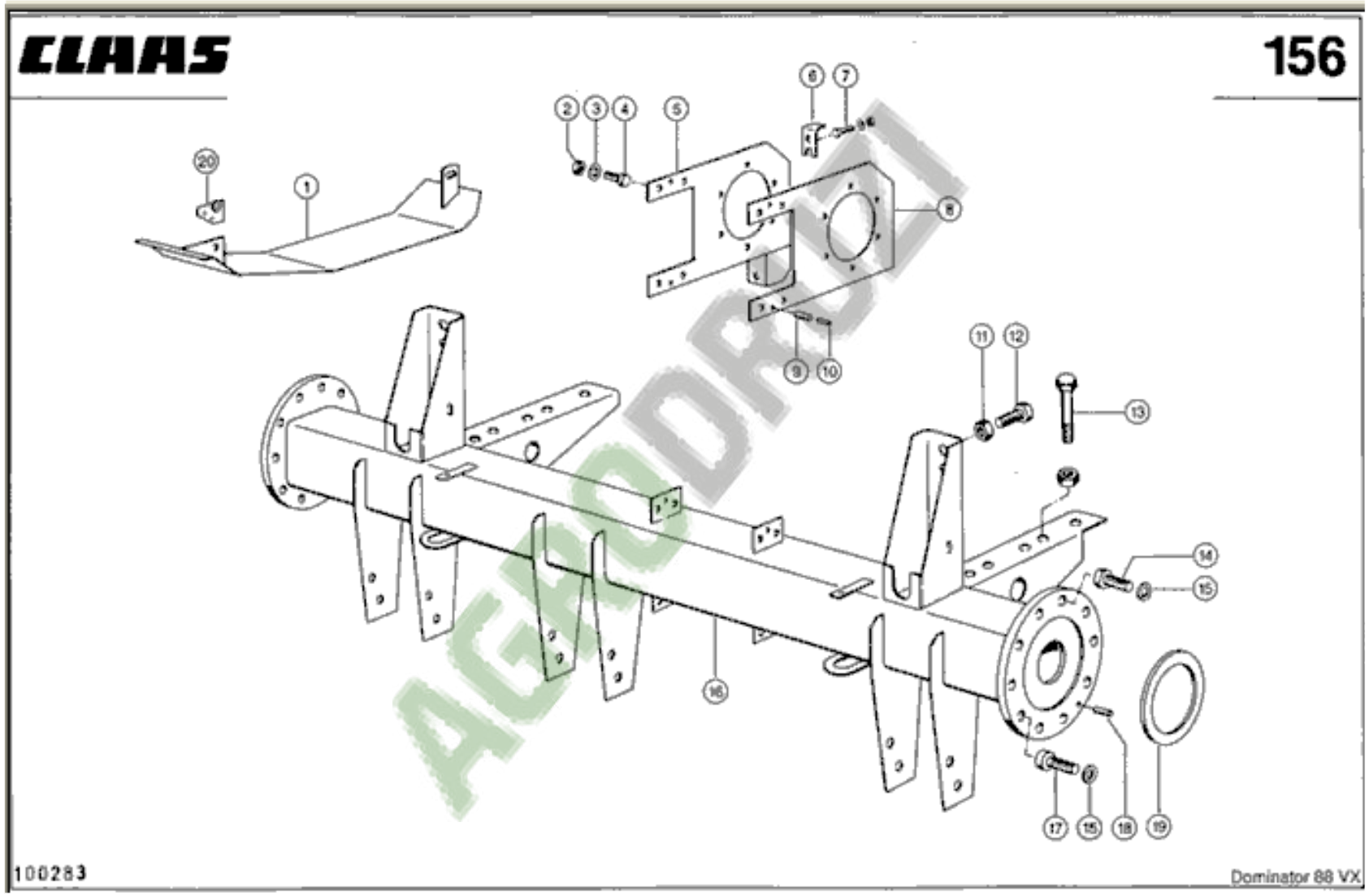
CLAAS
156
100283
Dominator 88 VX

CLAAS

157

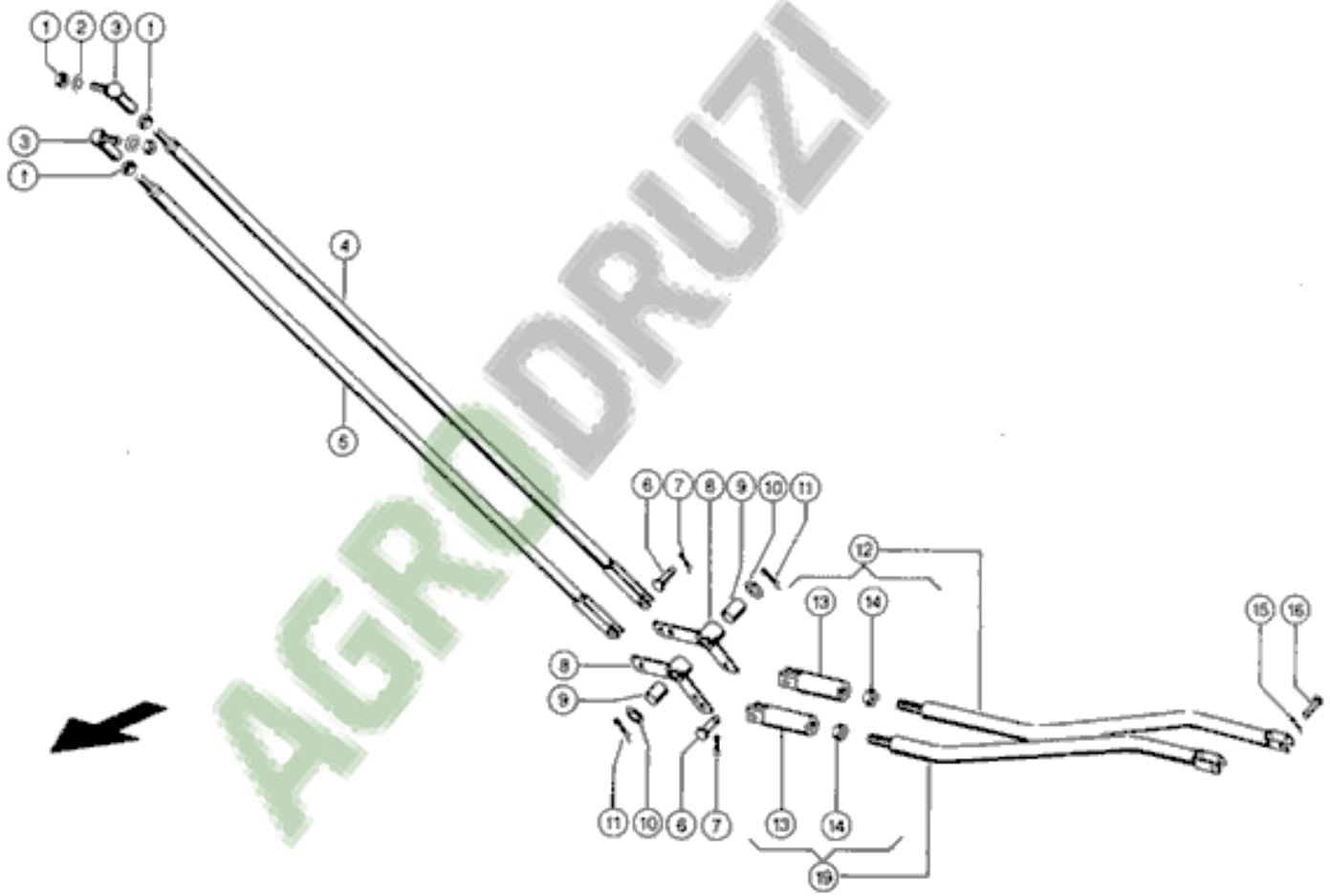


100264

Dominator 88 VX

AGRODRUZI

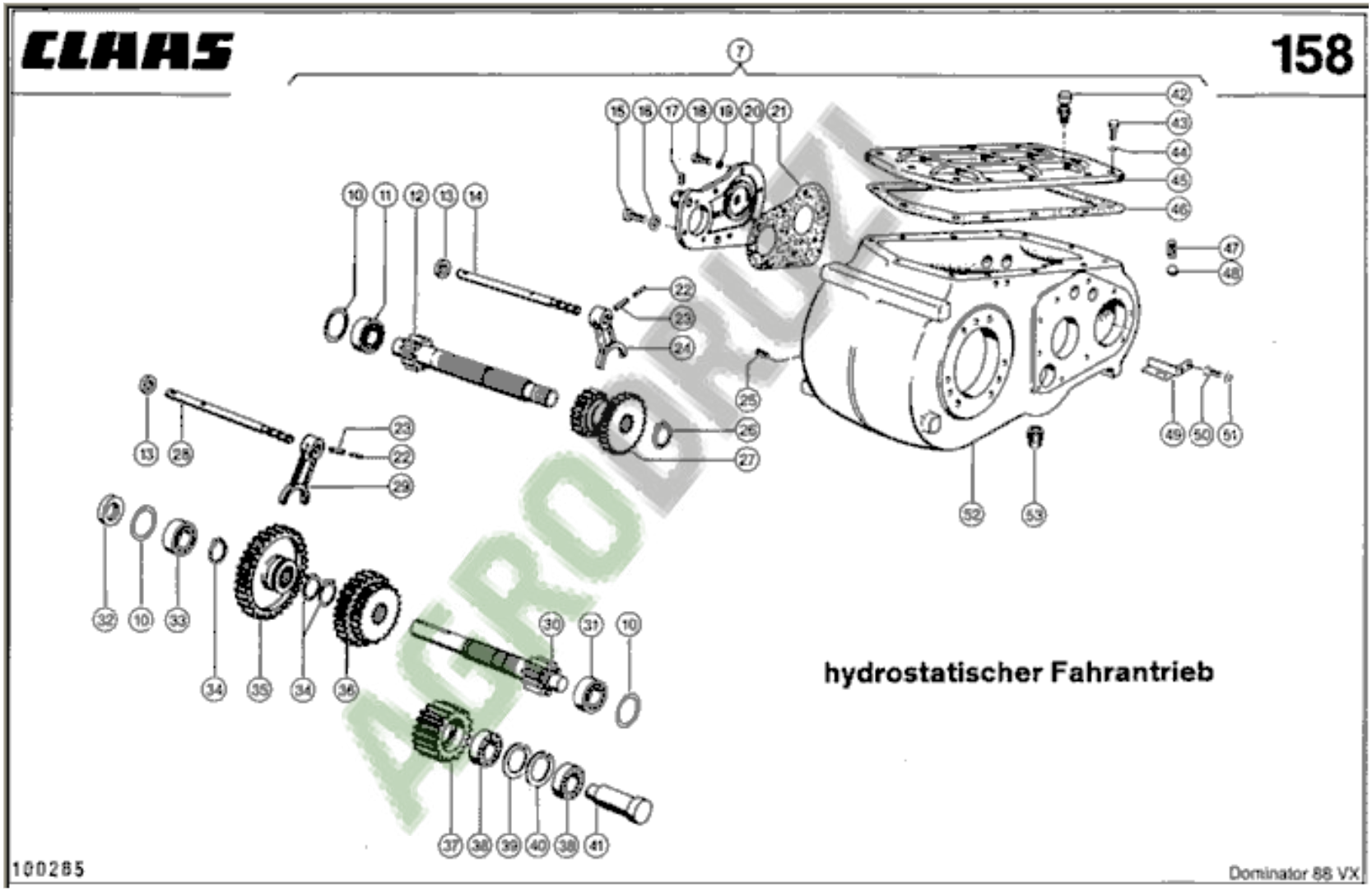
CLAAS
158
hydrostatischer Fahrantrieb
100285
Dominator 88 VX

CLAAS

159

## hydrostatischer Fahrantrieb

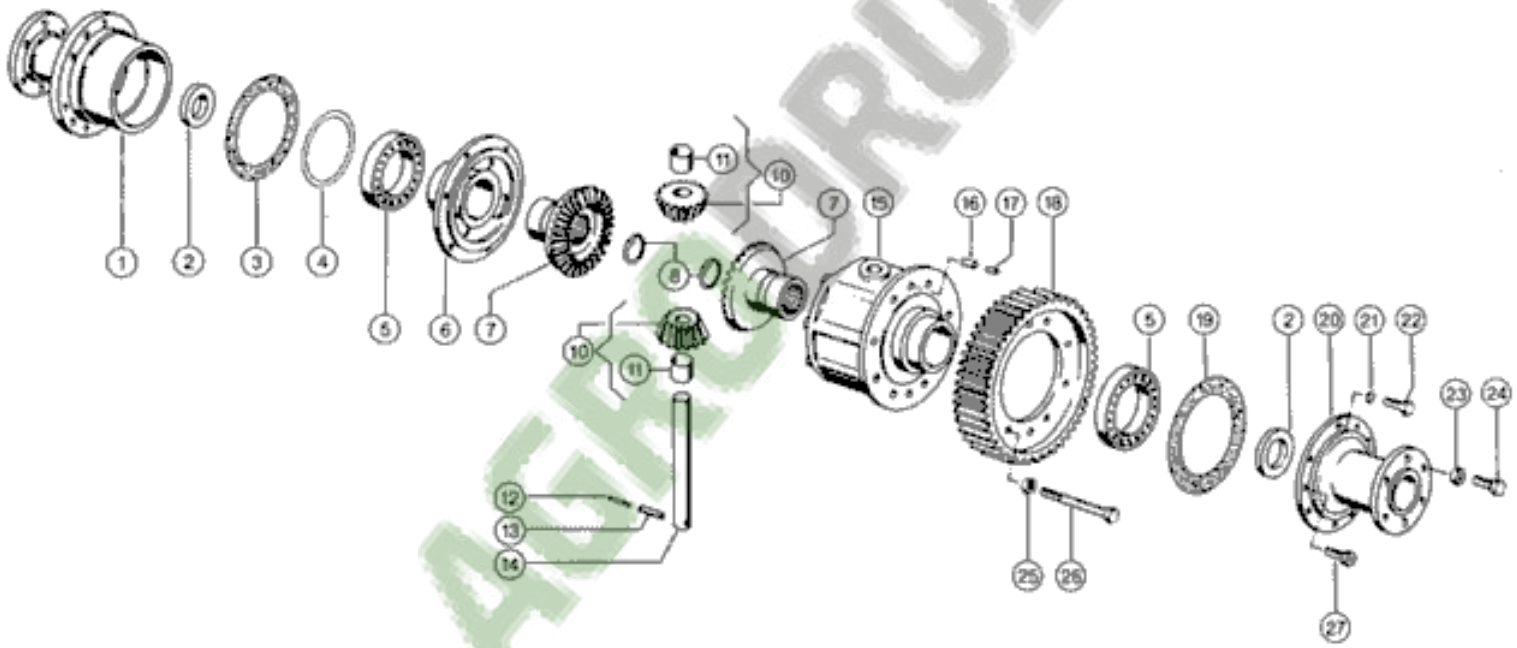


AGRODRUZI

100285

Dominator 88 VX

CLAAS

## hydrostatischer Fahrantrieb

160

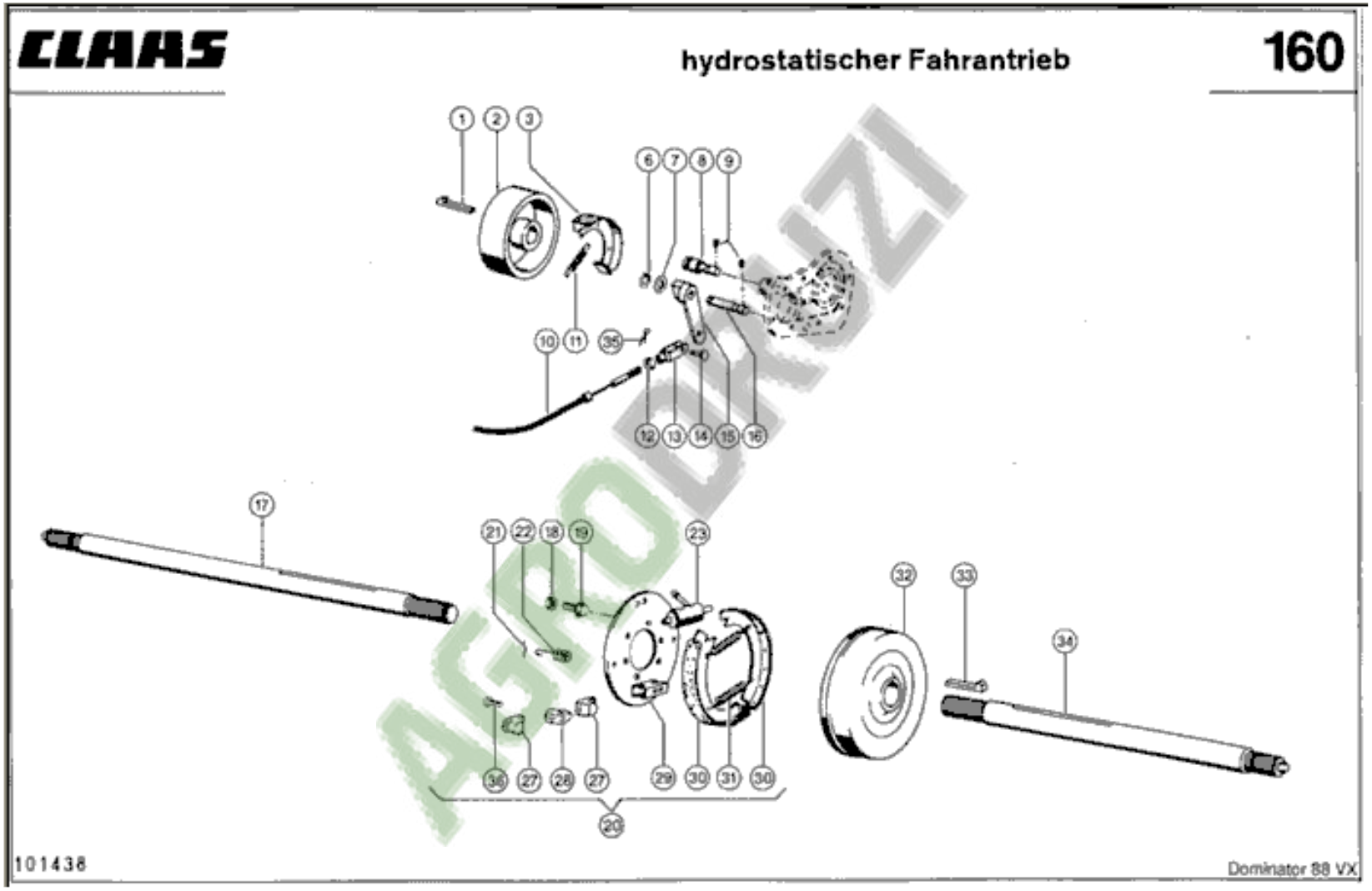


AGRODRUZI

CLAAS

## hydrostatischer Fahrantrieb

161

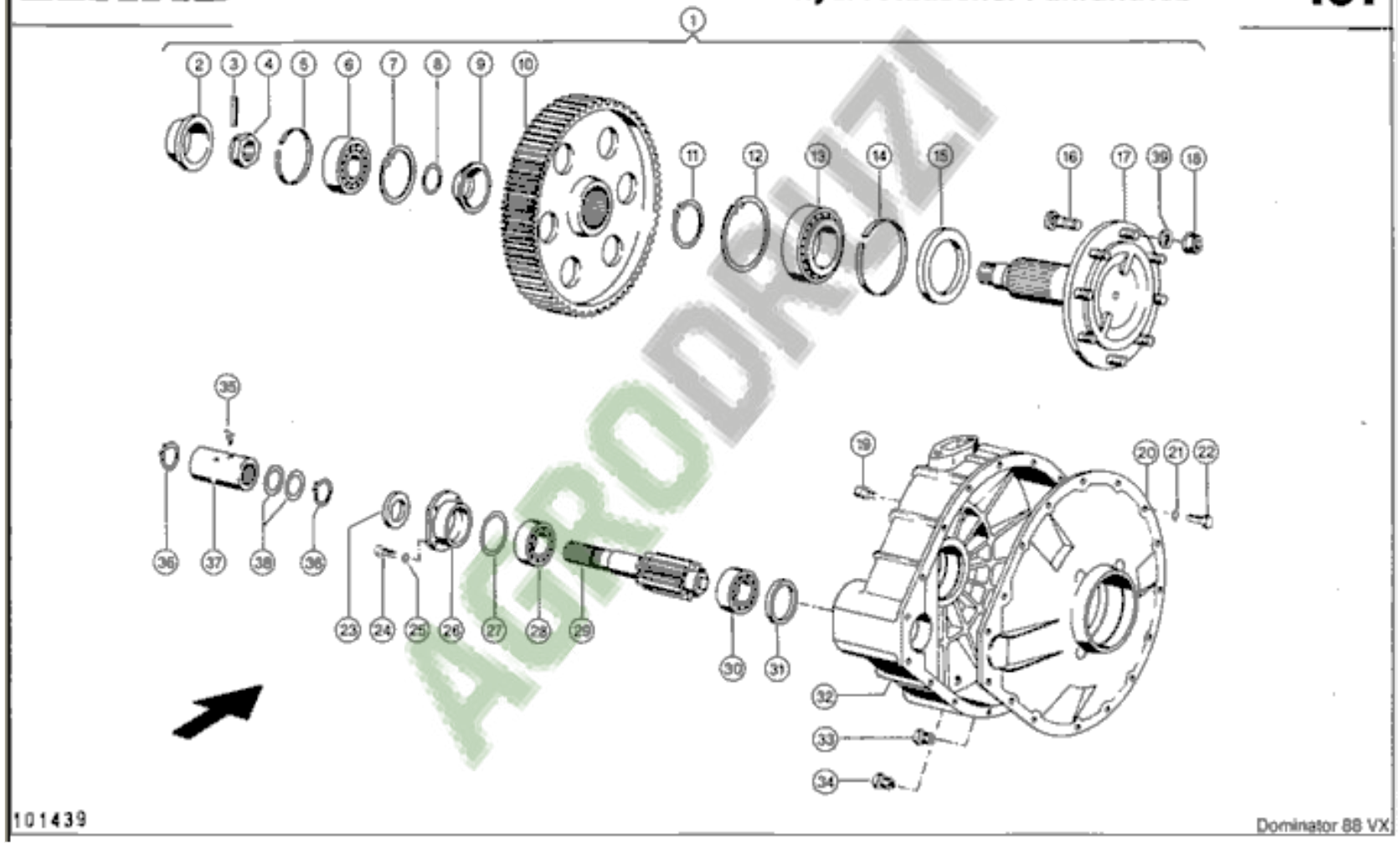


AGRODRUZI

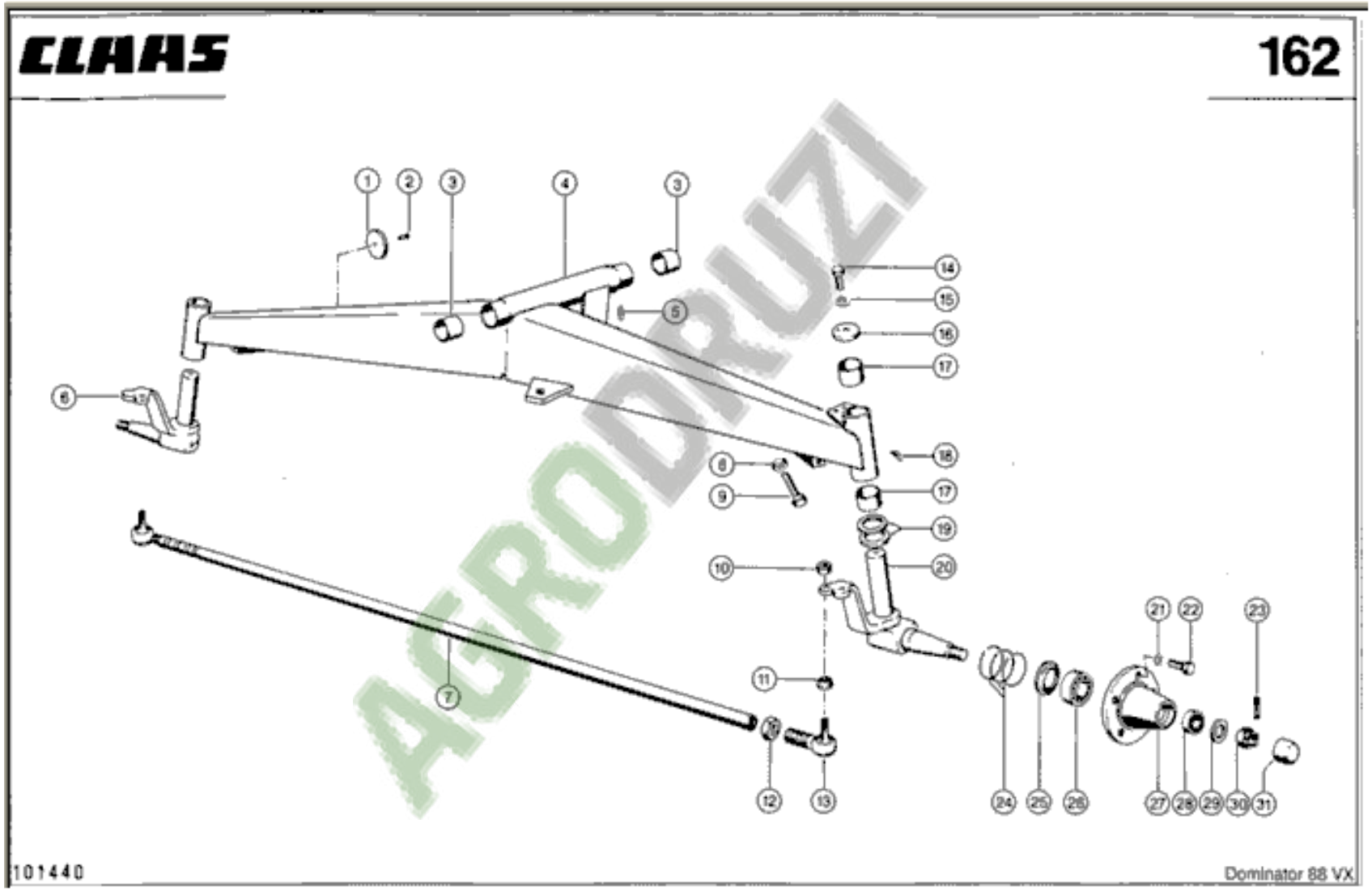


AGRODRUZI

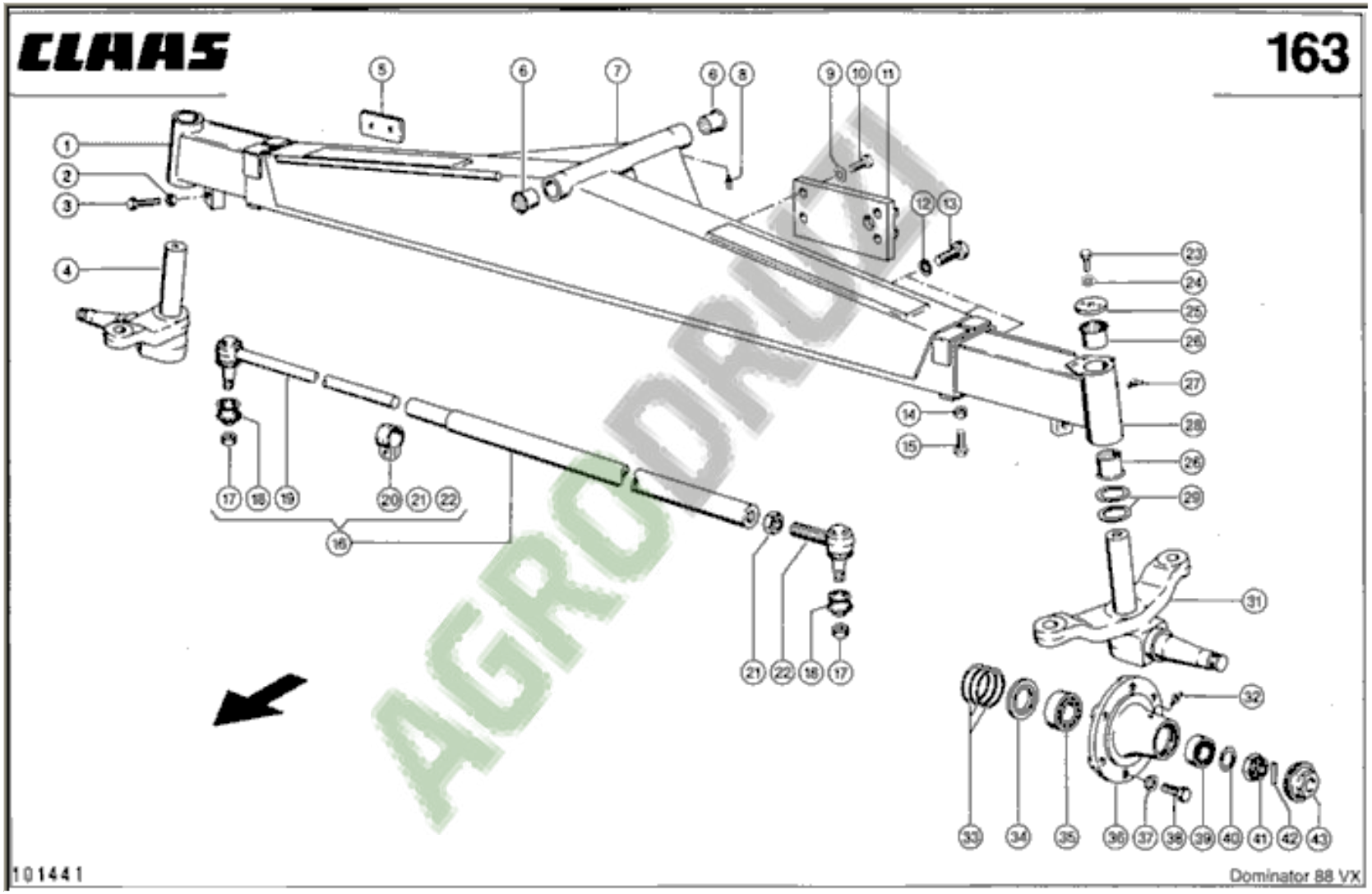
CLAAS
163
101441
Dominator 88 VX

CLAAS

4-TRAC SYSTEM

163A

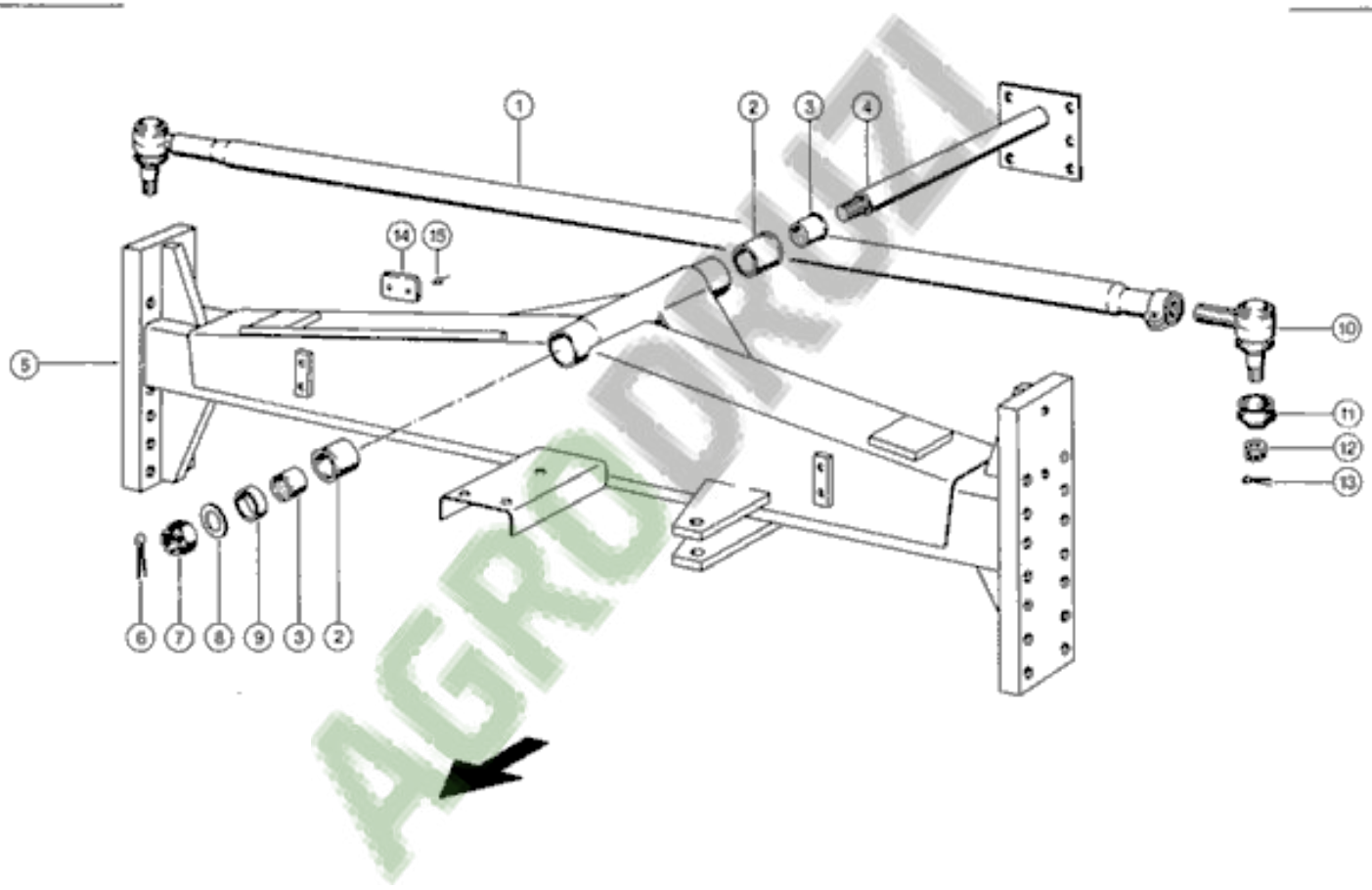


AGRODRUZI

101670

Dominator 88 VX

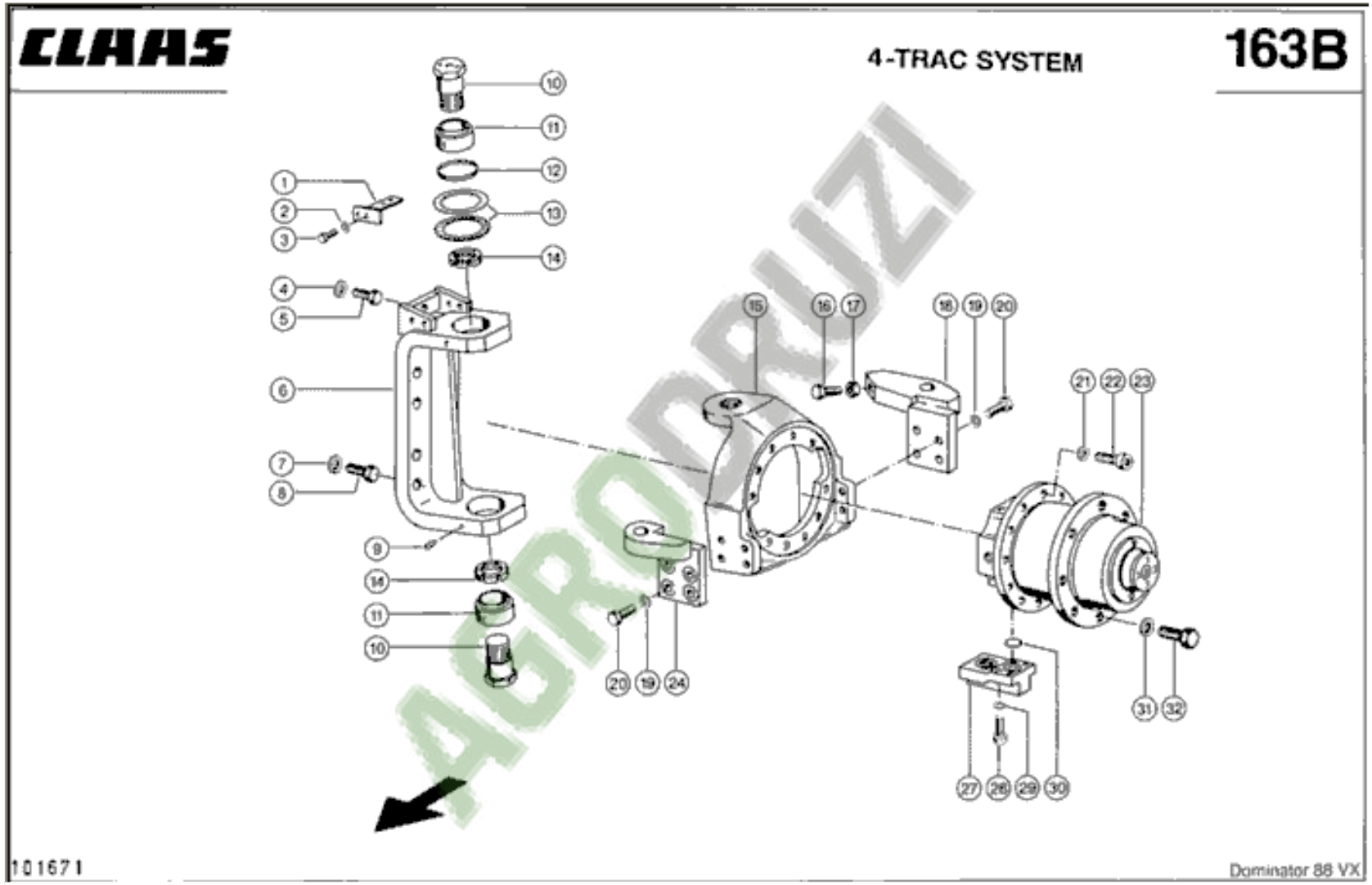
CLAAS
4-TRAC SYSTEM
163B
101671
Dominator 88 VX

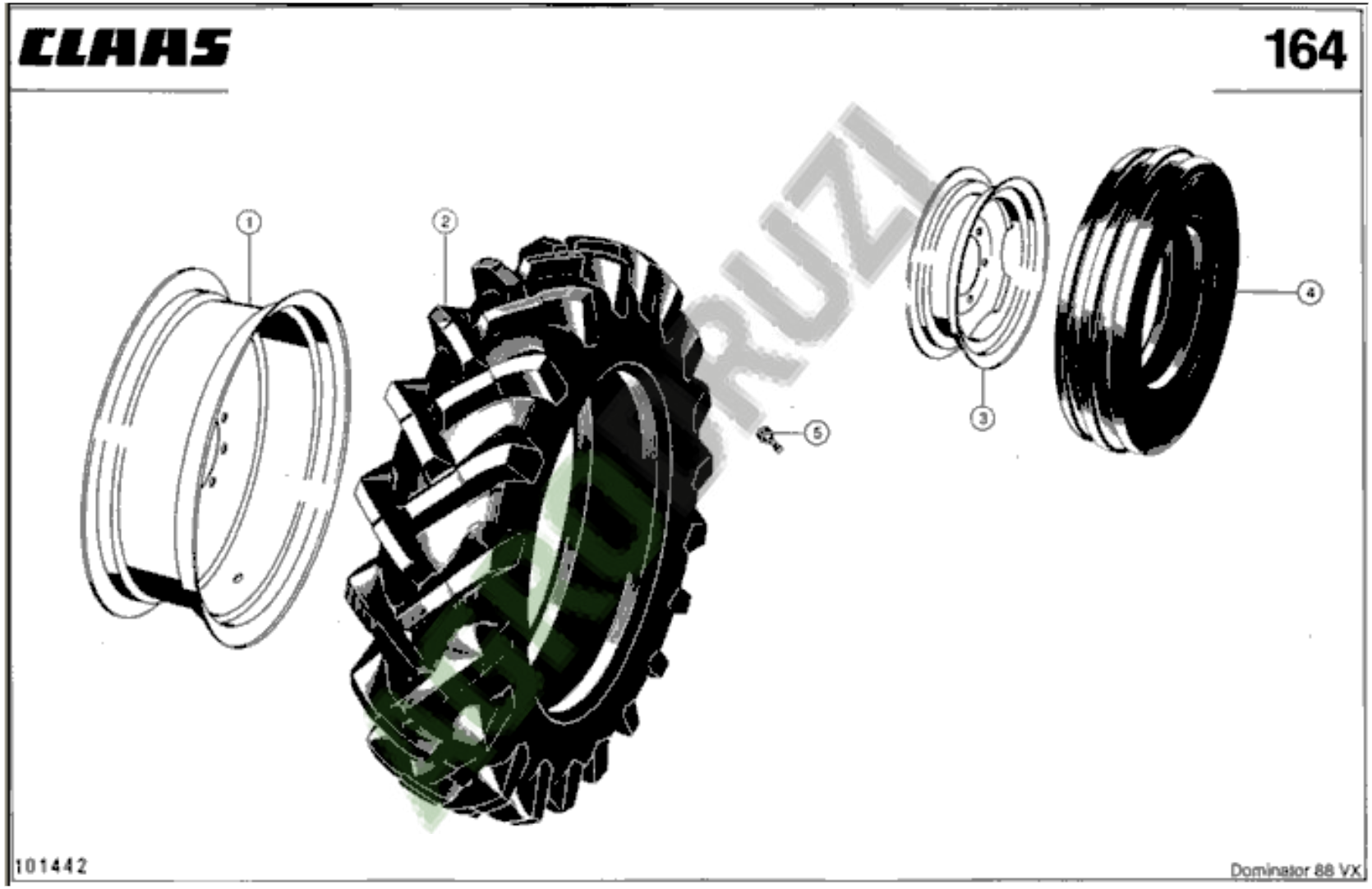
CLAAS
164
1
2
3
4
5
101442
Dominator 88 VX

# Maschinengehäuse

AGROBRUZI

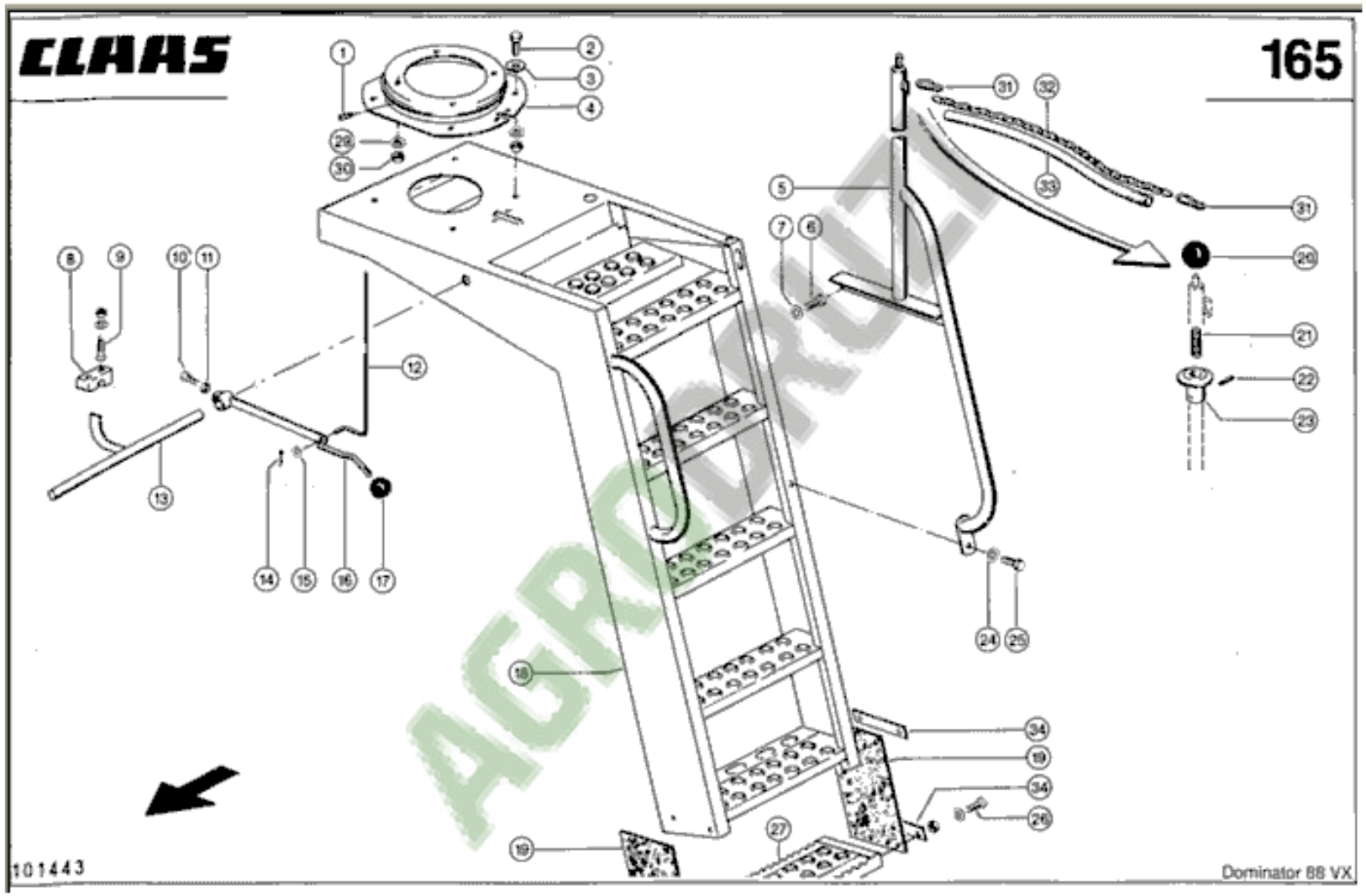
CLAAS
165
101443
Dominator 88 VX

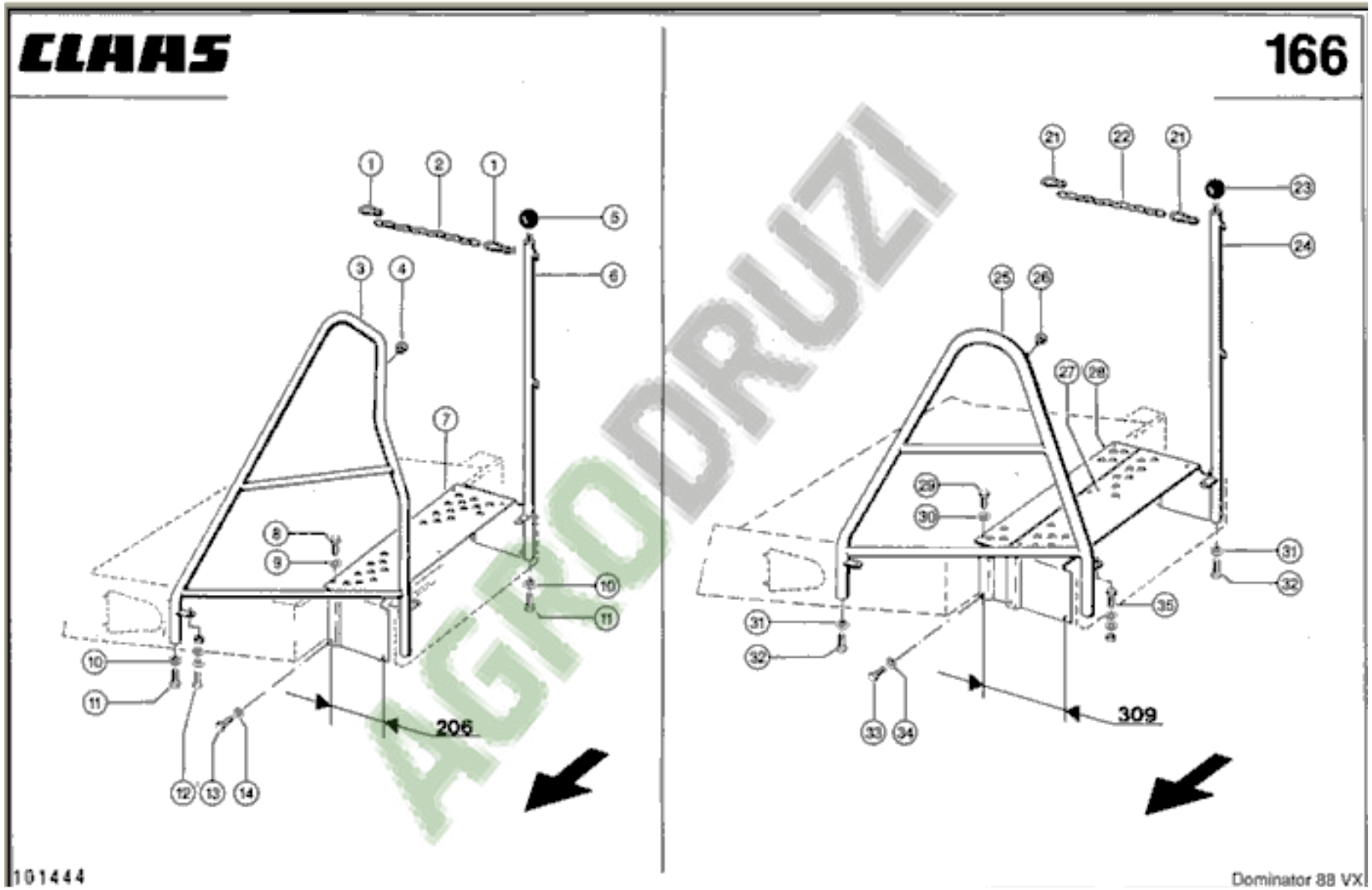


AGRODRUZI

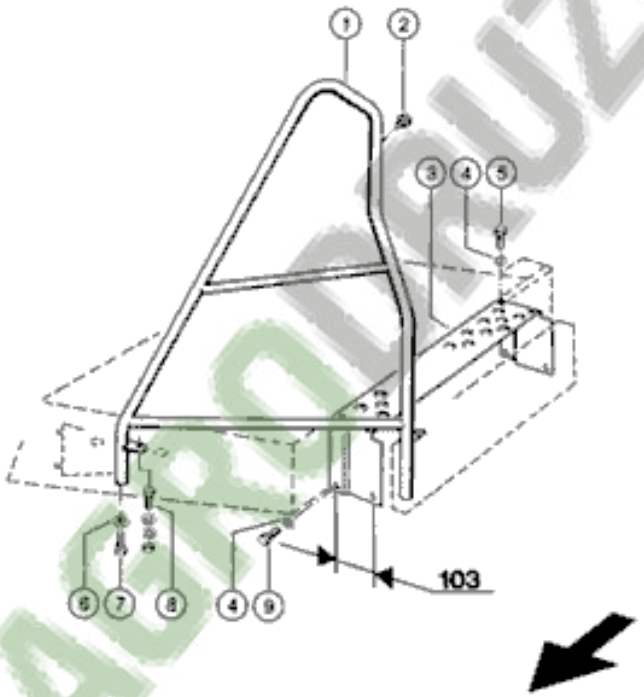


AGRODRUZI

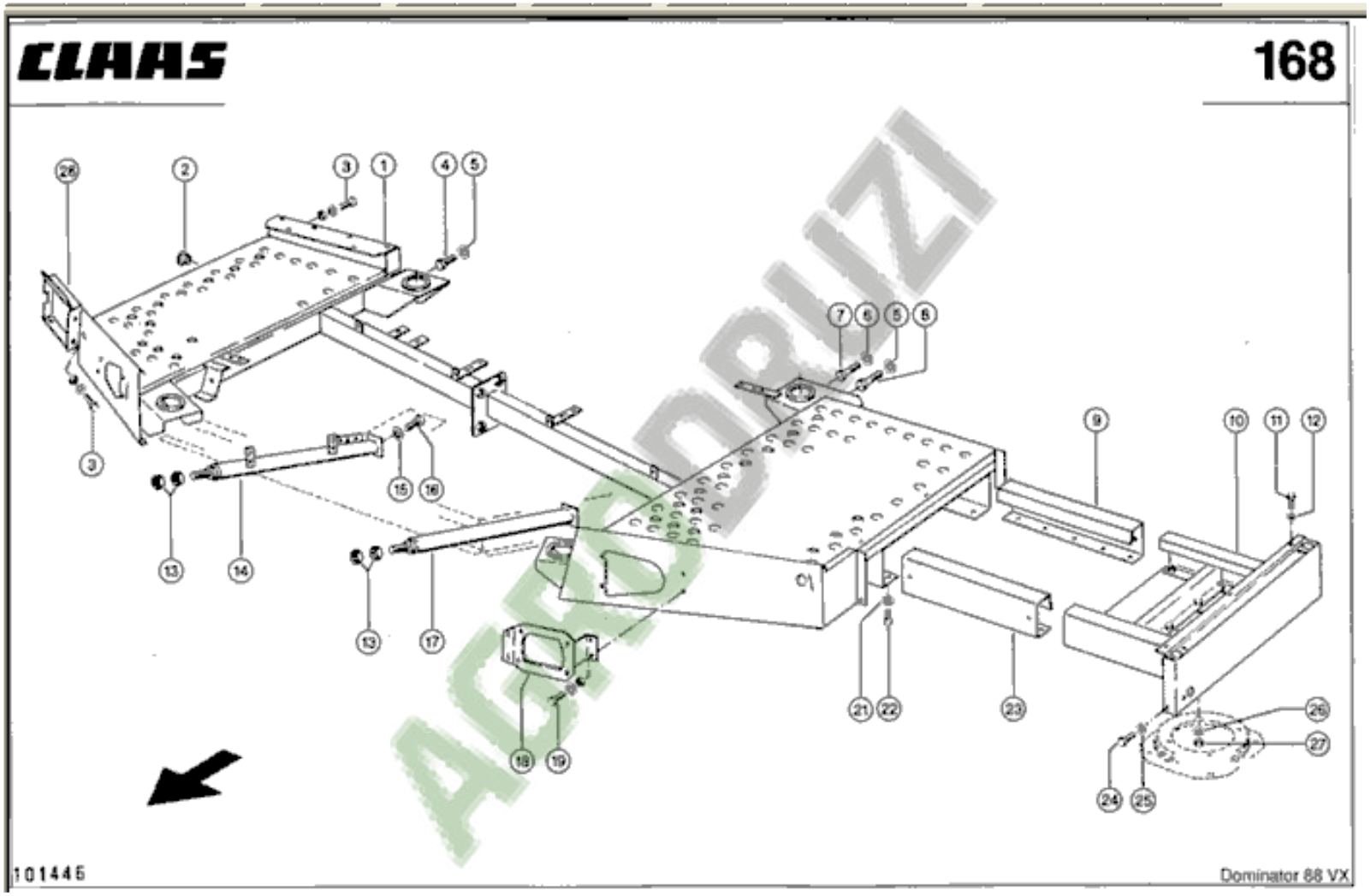
CLAAS
168
101445
Dominator 88 VX

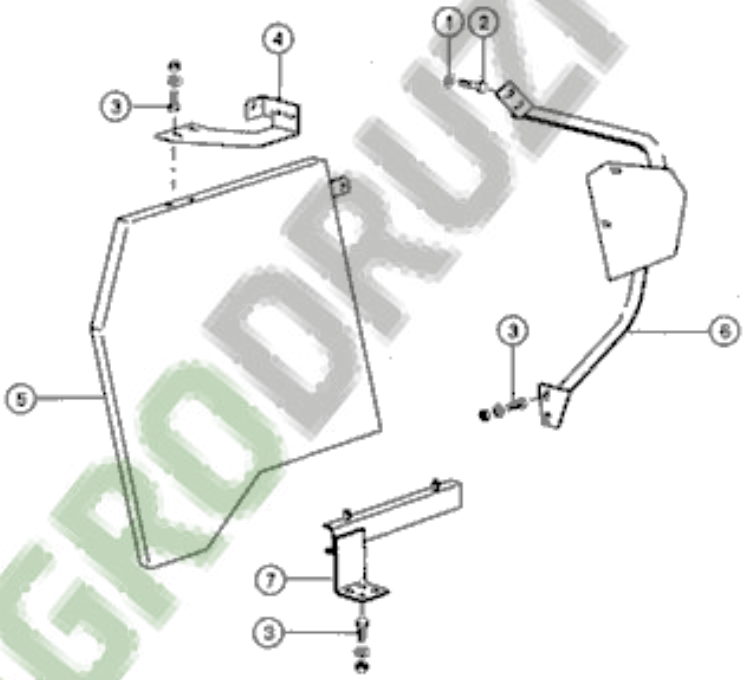


AGRODRUZI

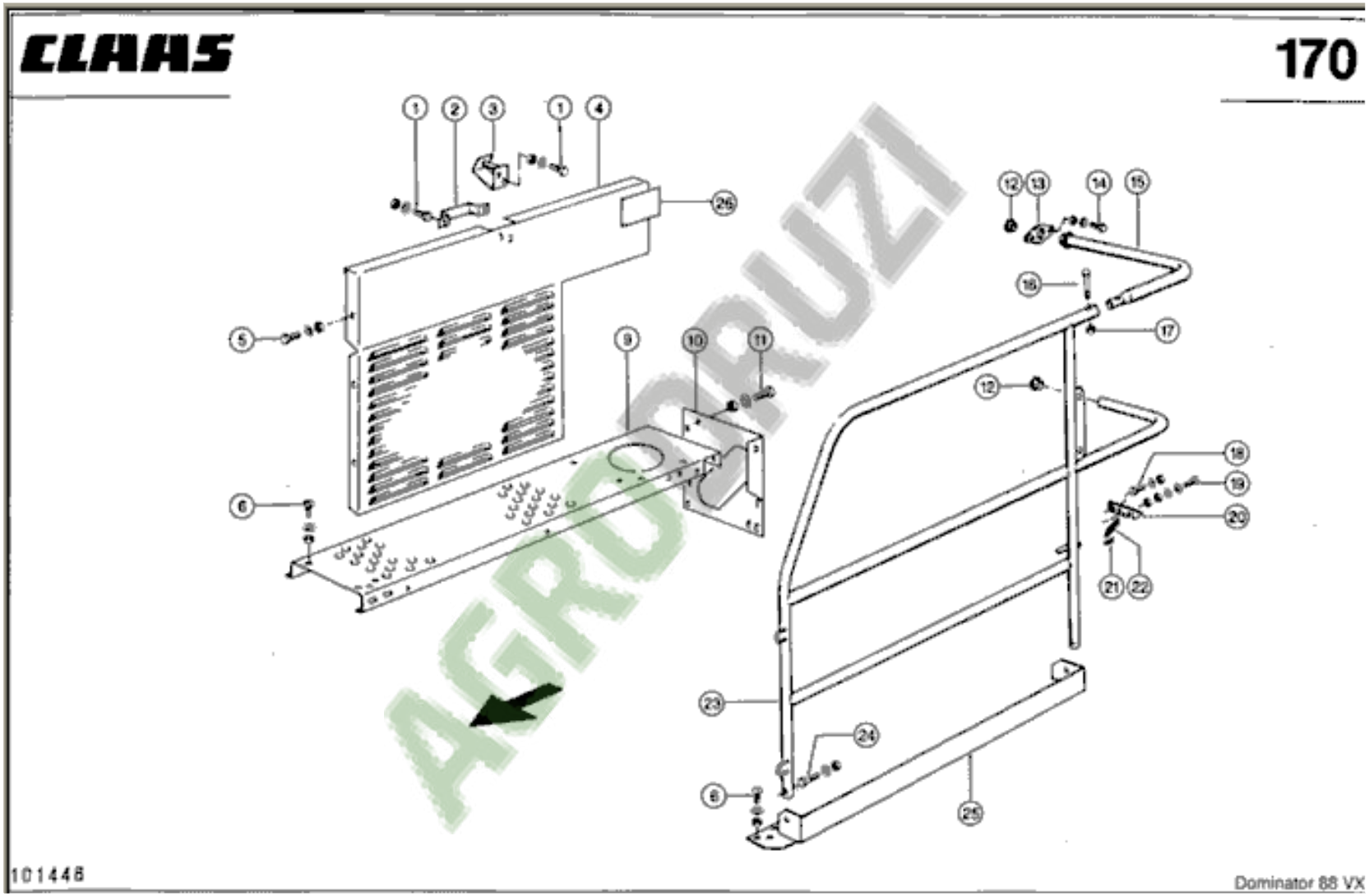


AGRODRUZI

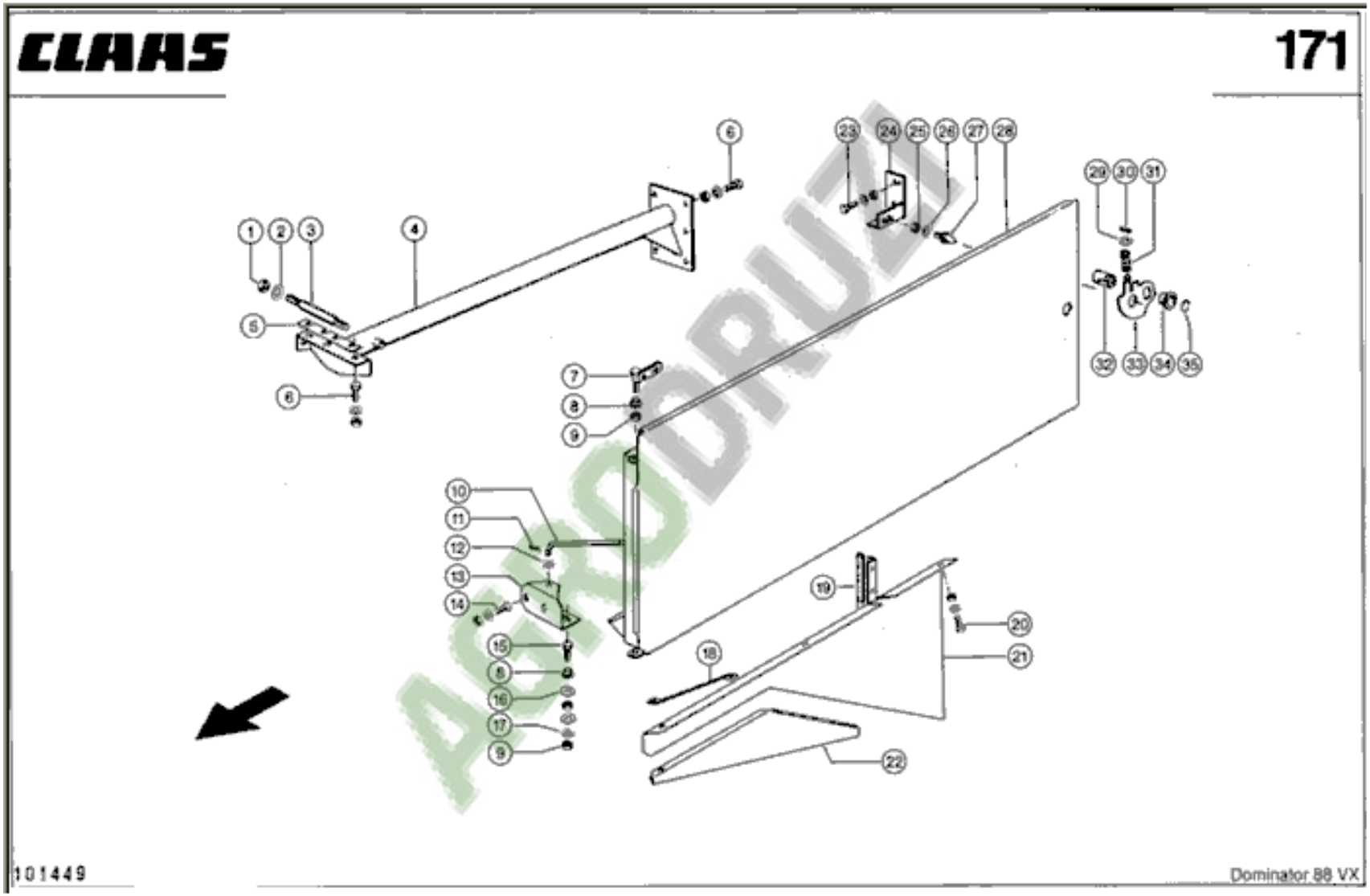
1
2
3
4
5
6
7
8
9
10
11
12
13
14
15
16
17
18
19
20
21
22
23
24
25
26
27
28
29
30
31
32
33
34
35
AGRODRUZI

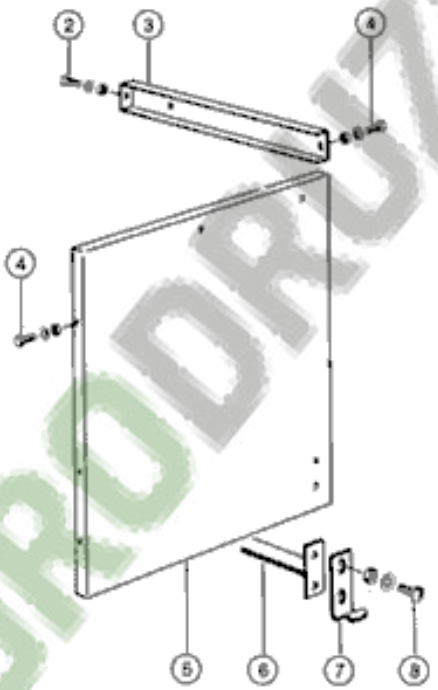


AGRODRUZI

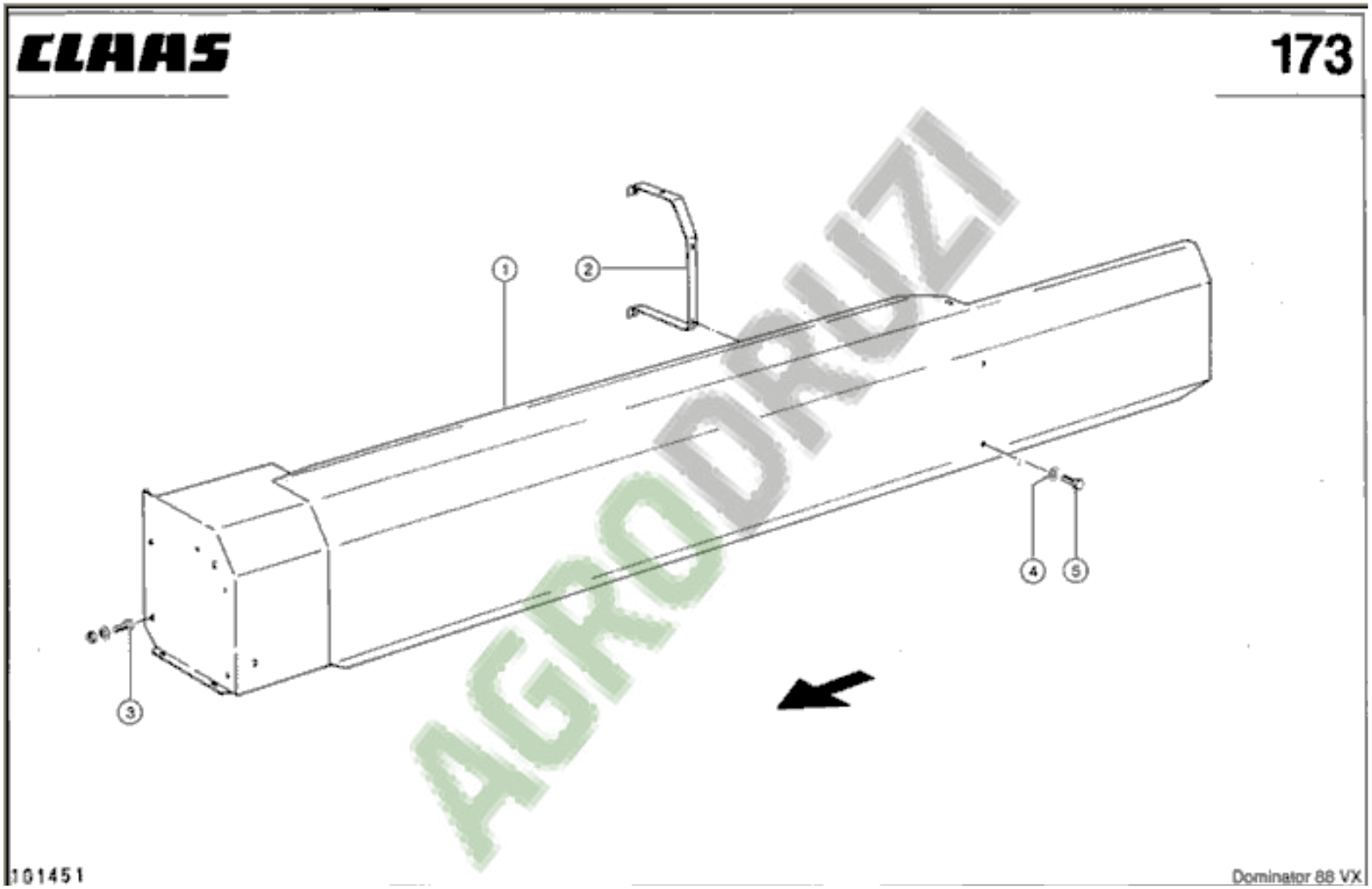


AGRODRUZI

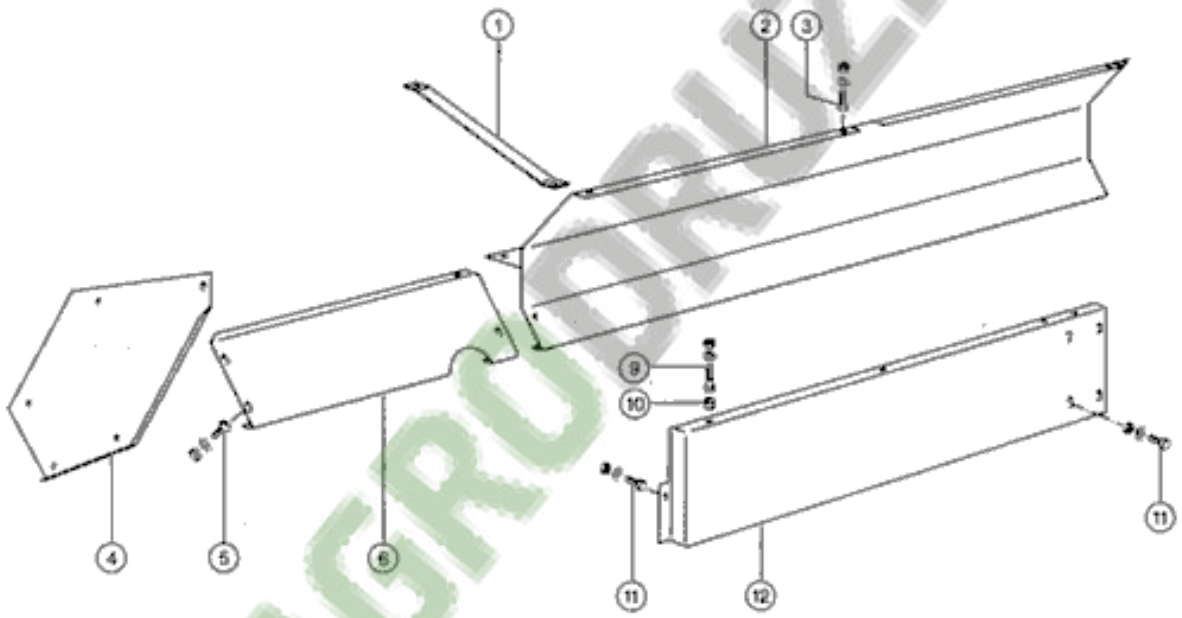


AGRODRUZI

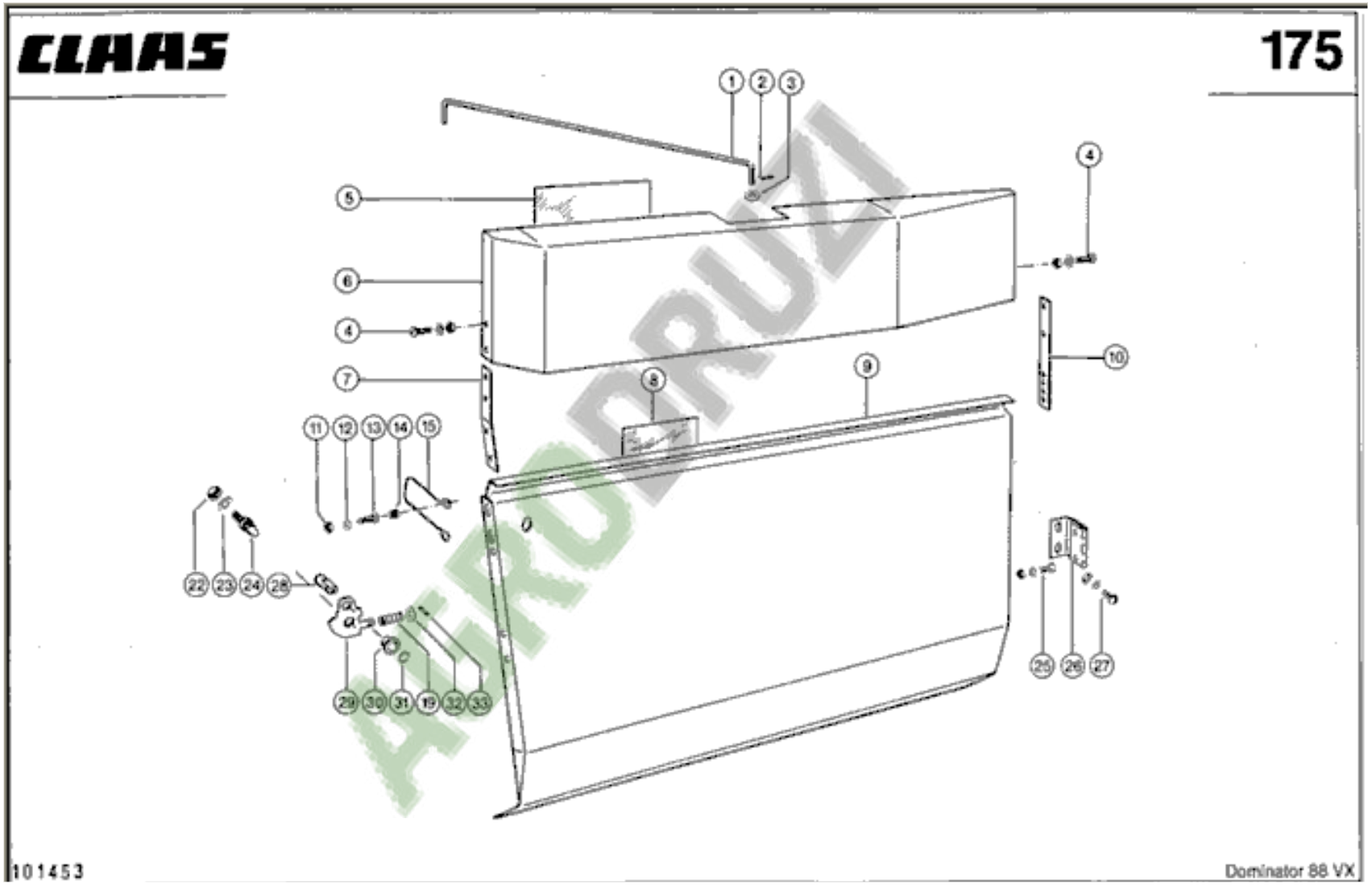
CLAAS
175
1
2
3
4
5
6
4
7
8
9
10
11
12
13
14
15
22
23
24
28
29
30
31
19
32
33
25
26
27
101453
Dominator 88 VX

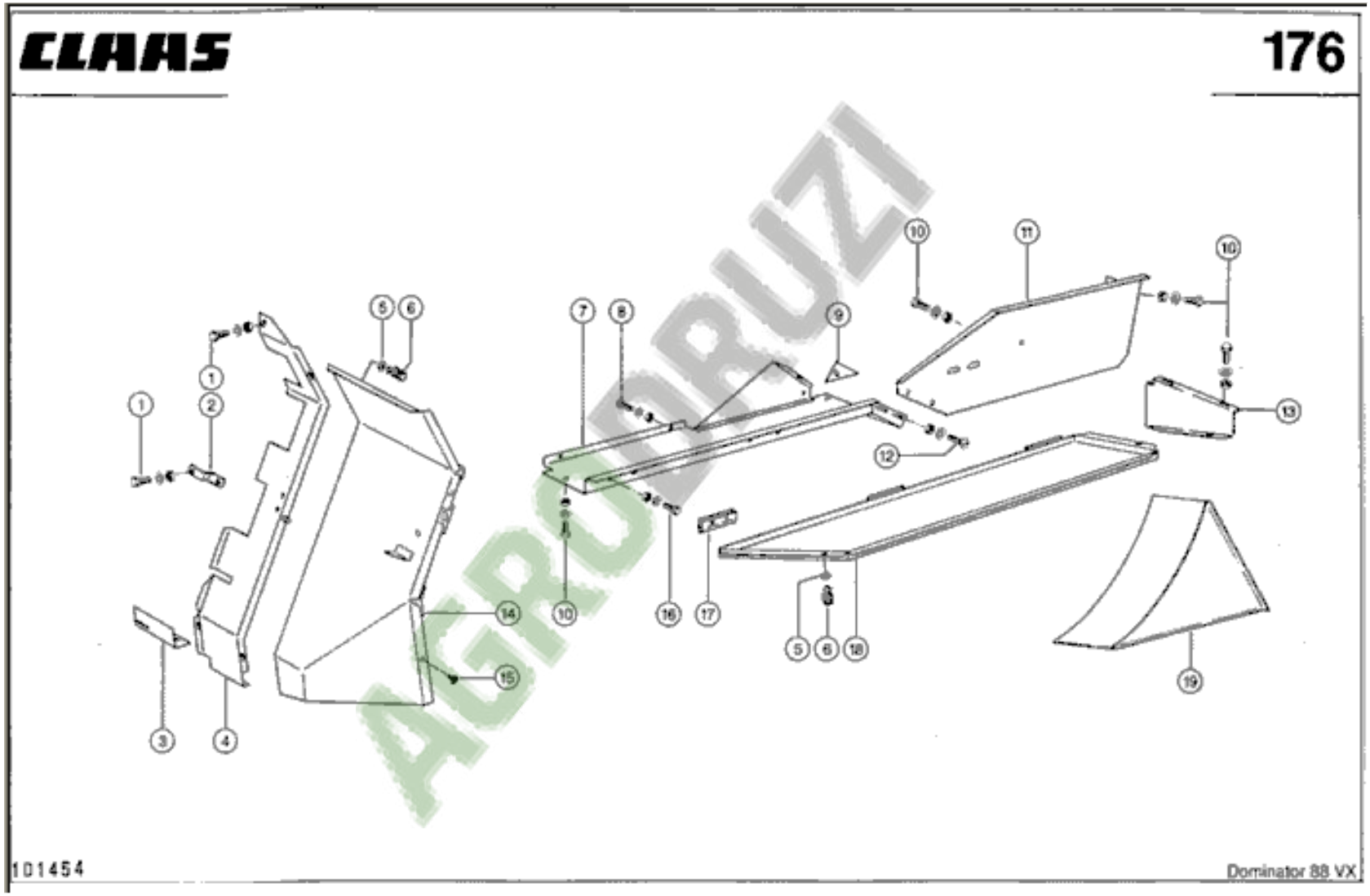


AGRODRUZI

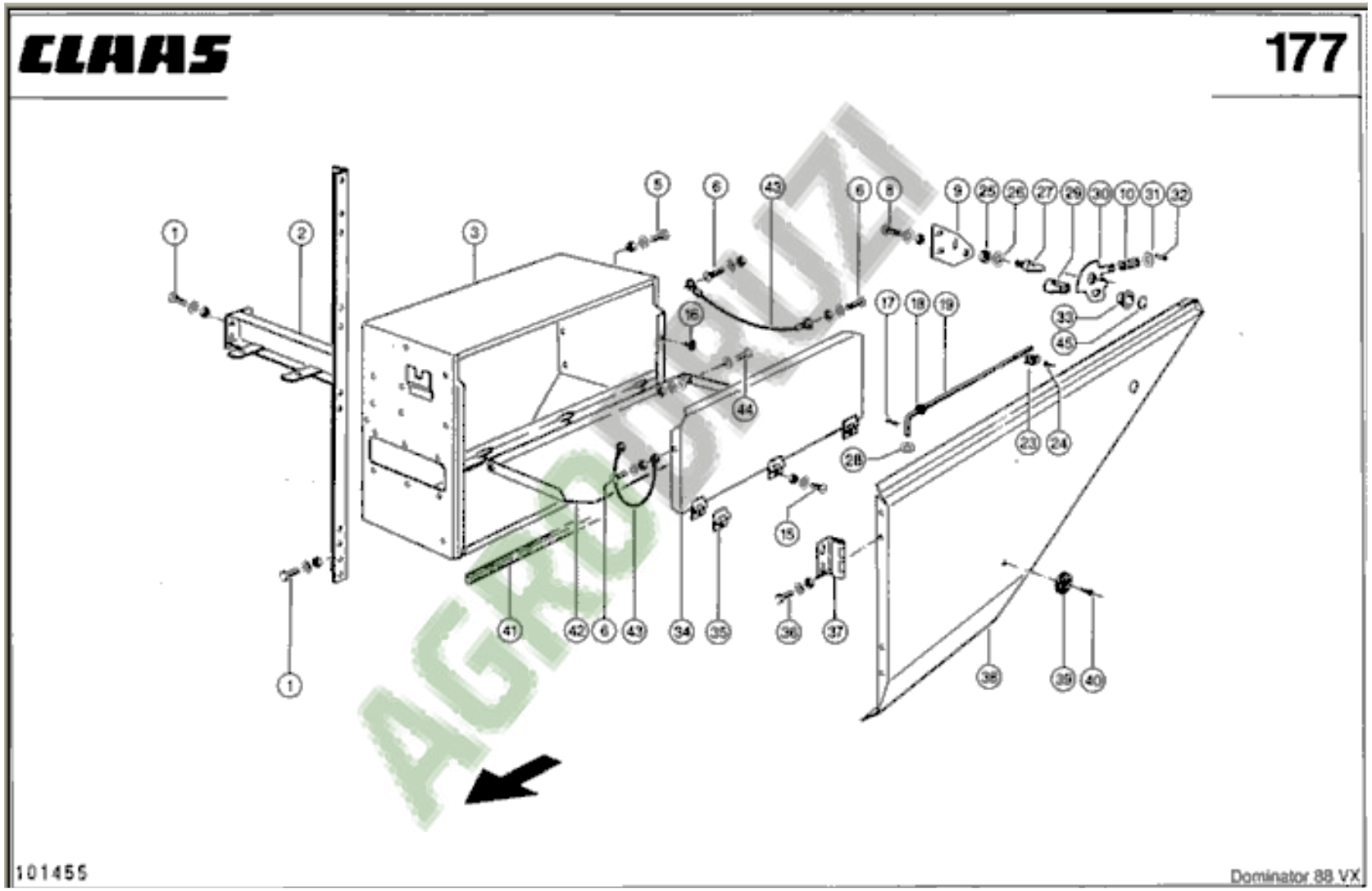
CLAAS
177
101455
Dominator 88 VX

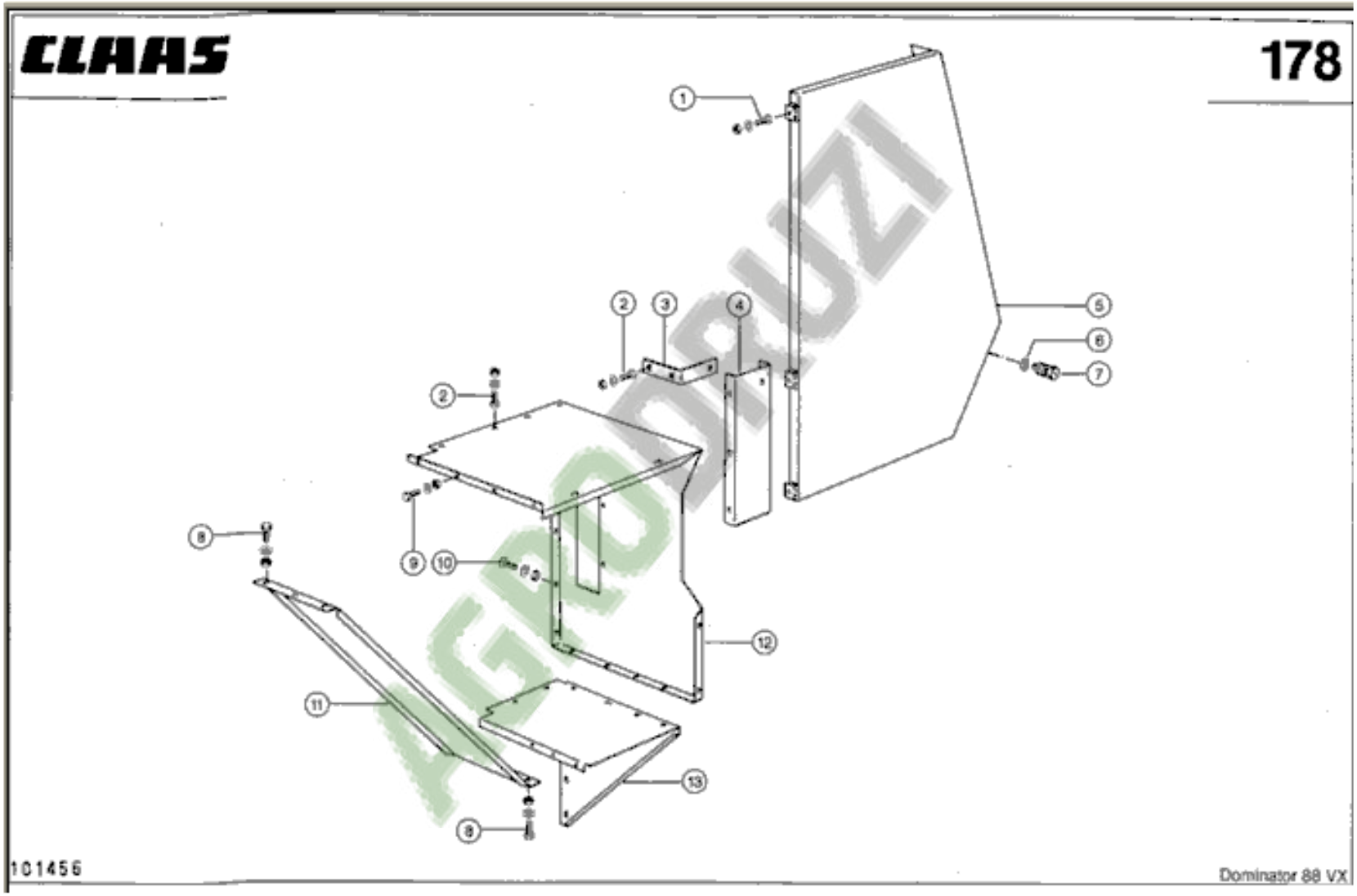
CLAAS
178
1
2
3
4
5
6
7
2
8
9
10
11
12
13
8
101456
Dominator 88 VX

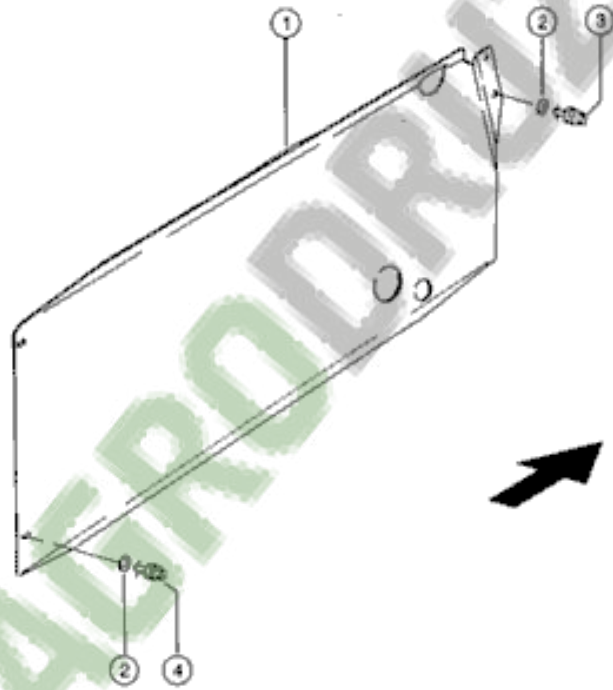


AGRODRUZI

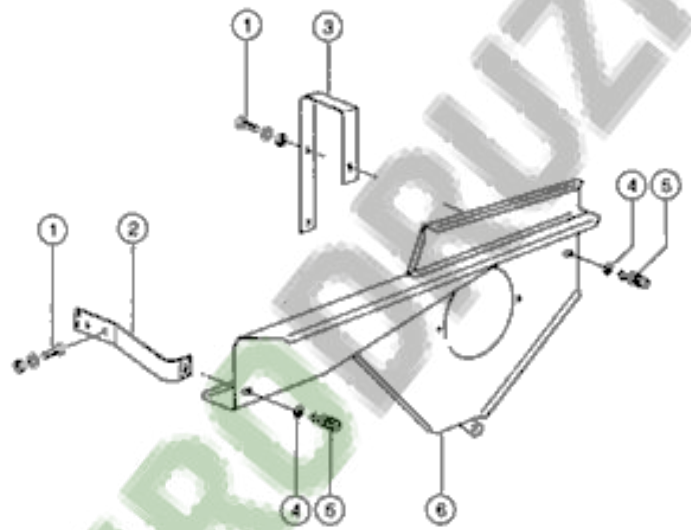


AGRODRUZI

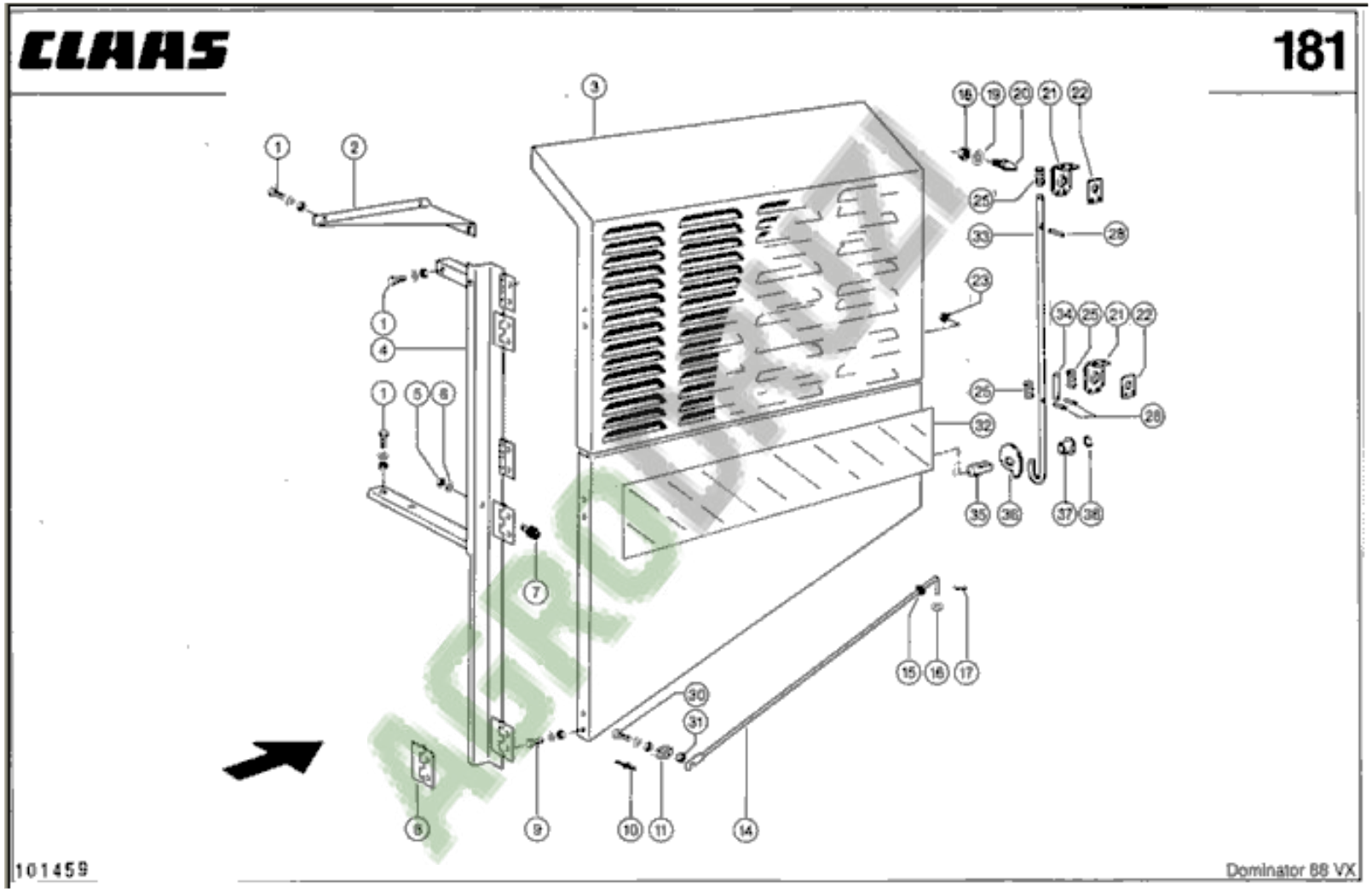
CLAAS
181
101459
Dominator 88 VX

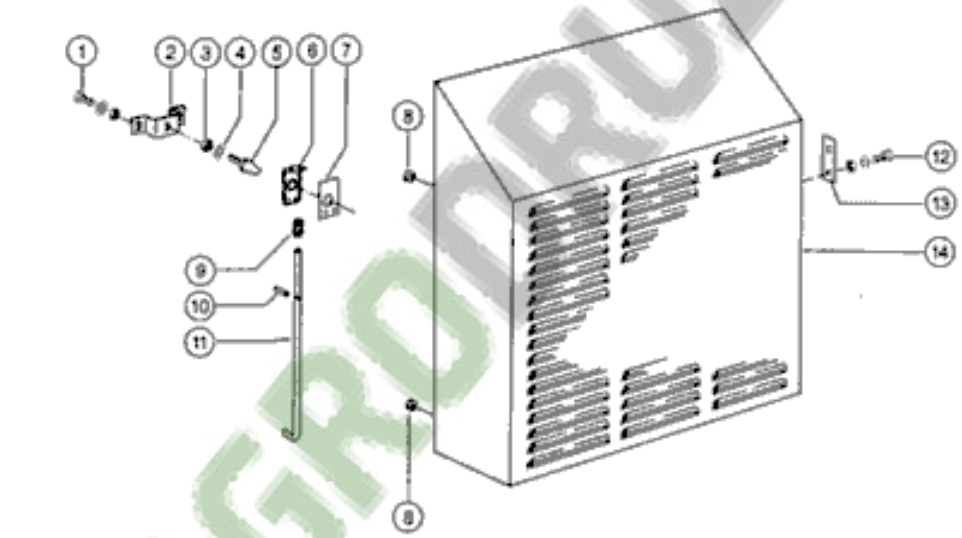


AGRODRUZI

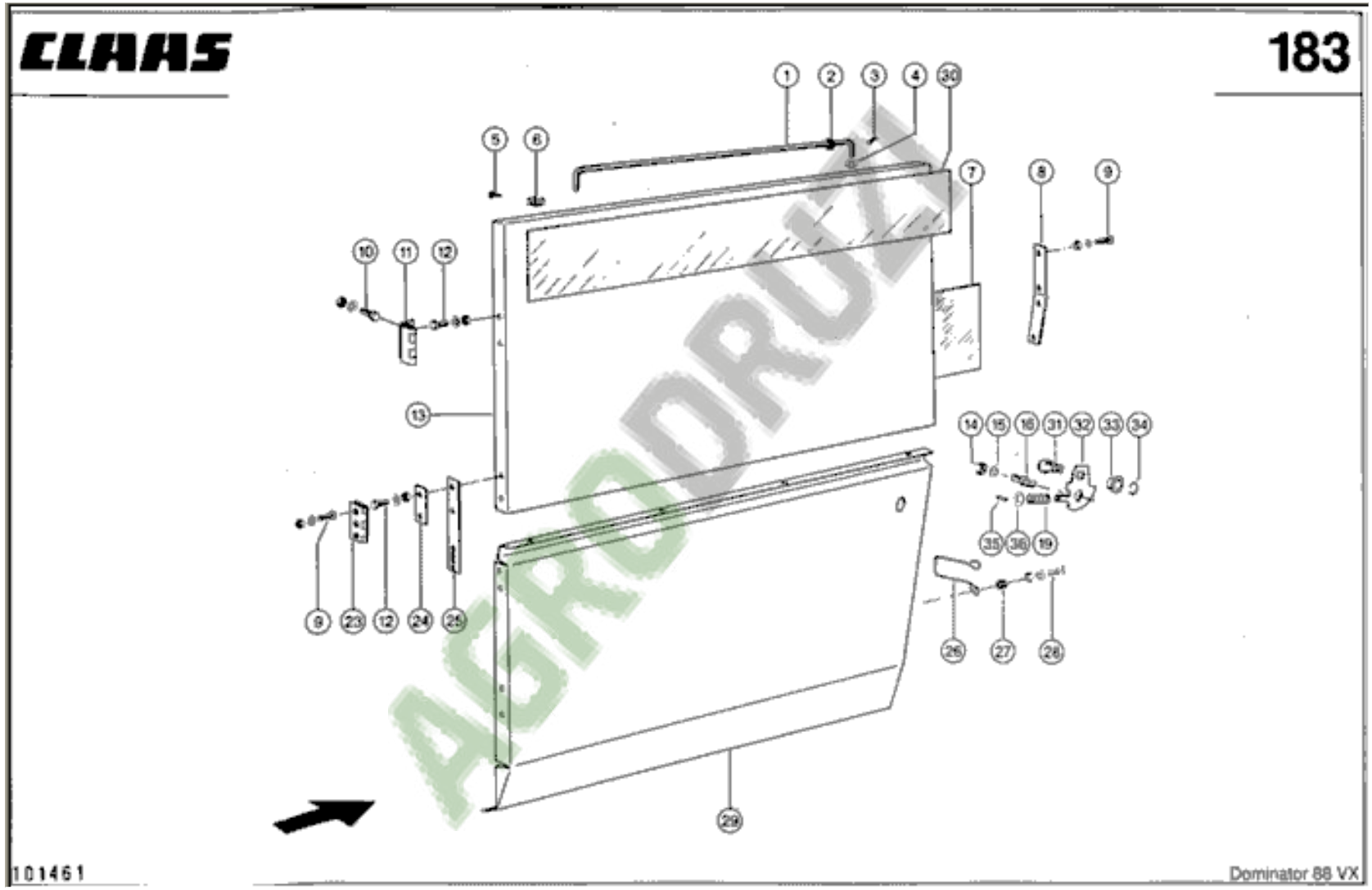
CLAAS
183
1
2
3
4
30
5
6
7
8
9
10
11
12
13
14
15
16
31
32
33
34
35
36
19
9
23
12
24
25
26
27
28
29
101461
Dominator 88 VX

AGRODRUZI

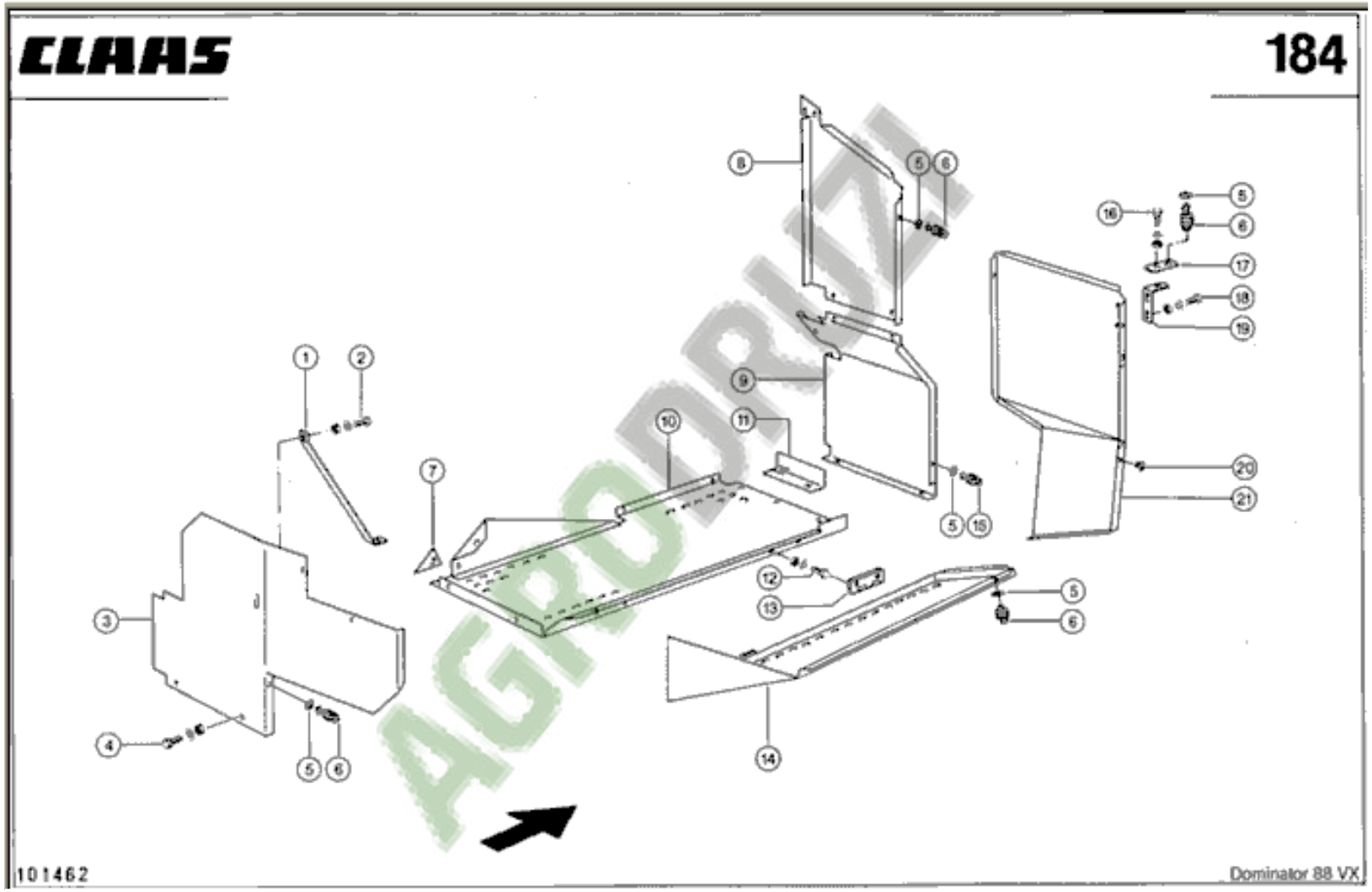
CLAAS
184
101462
Dominator 88 VX

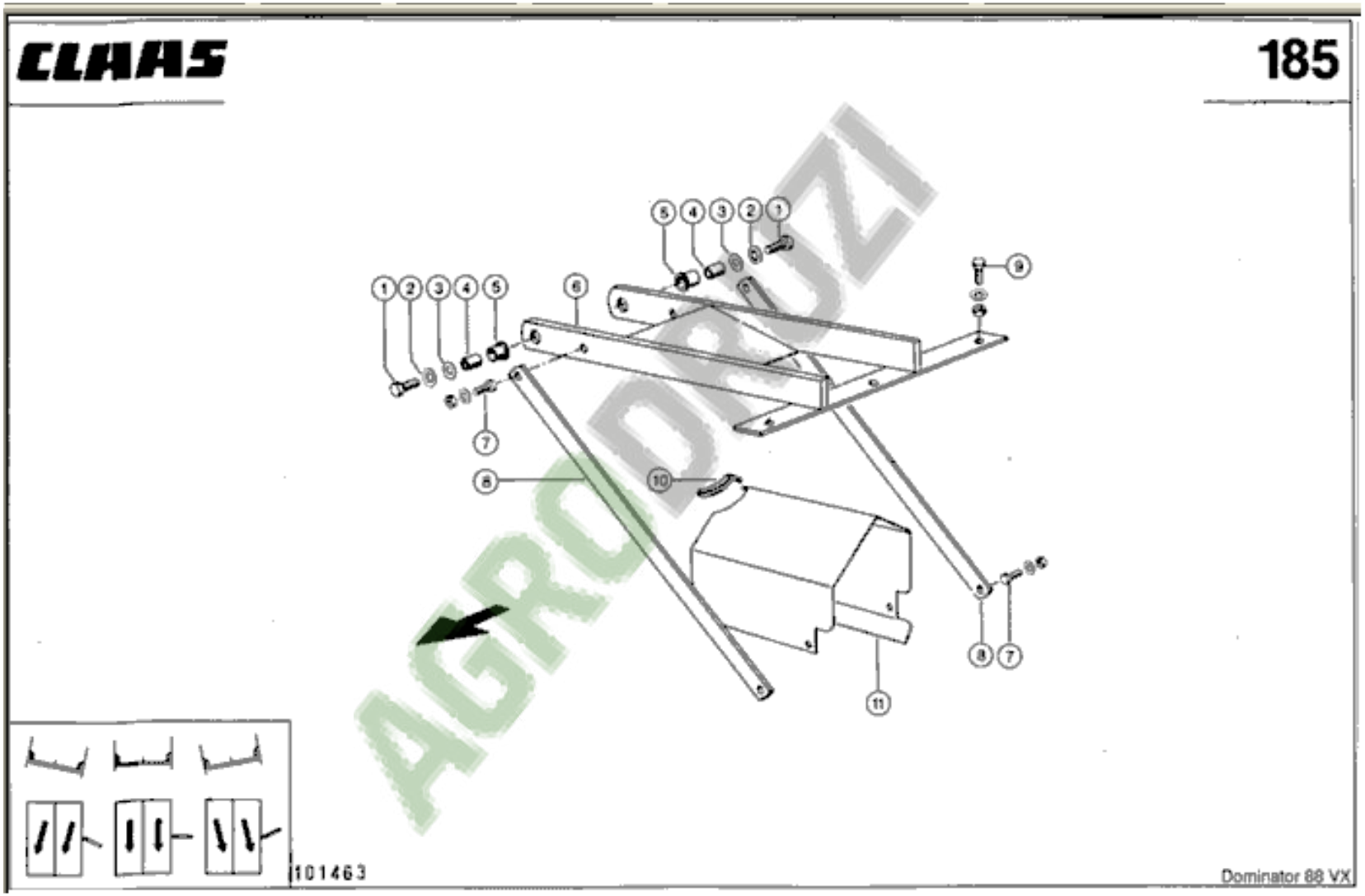


AGRODRUZI

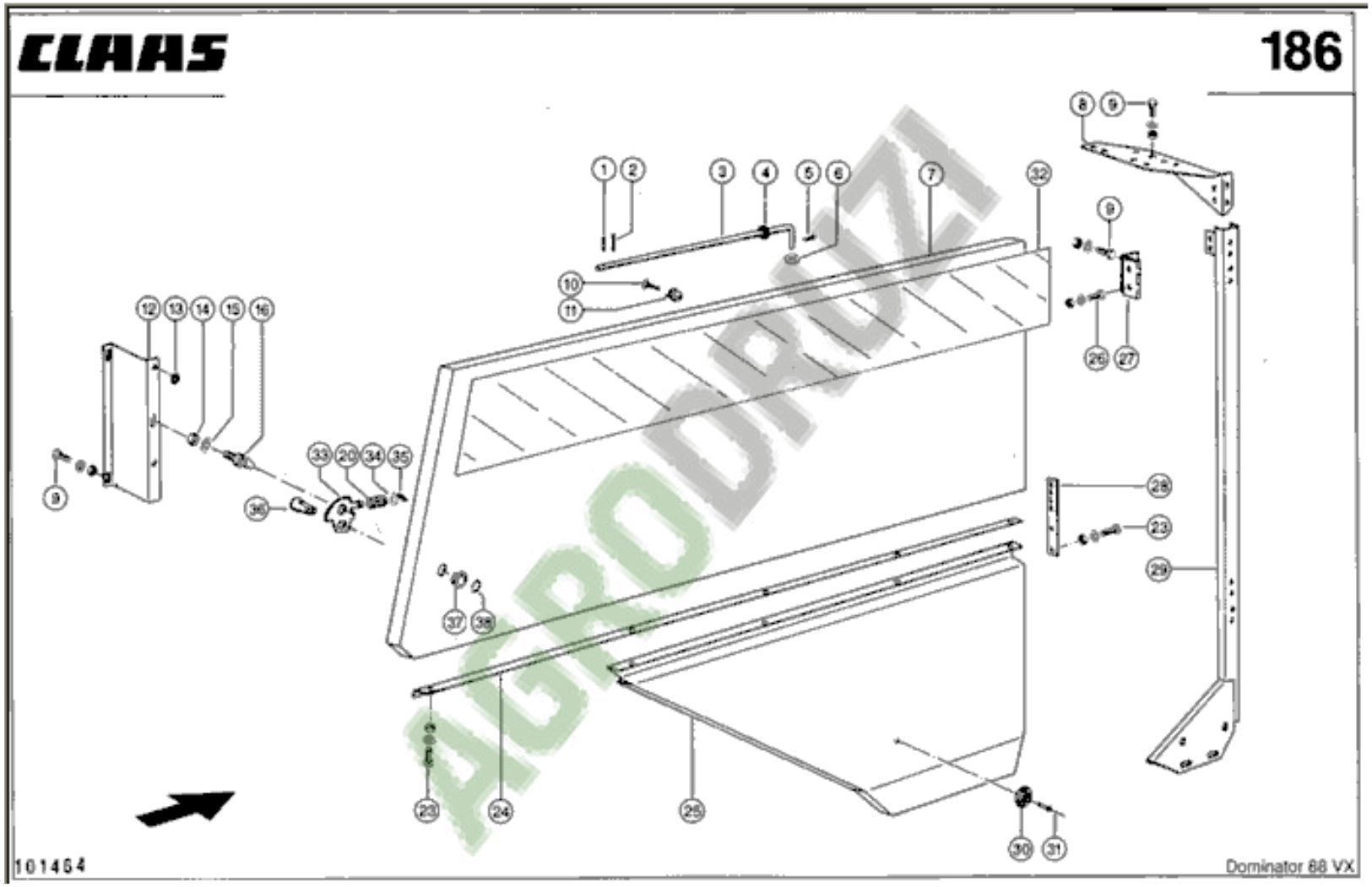
CLAAS
186
101464
Dominator 88 VX

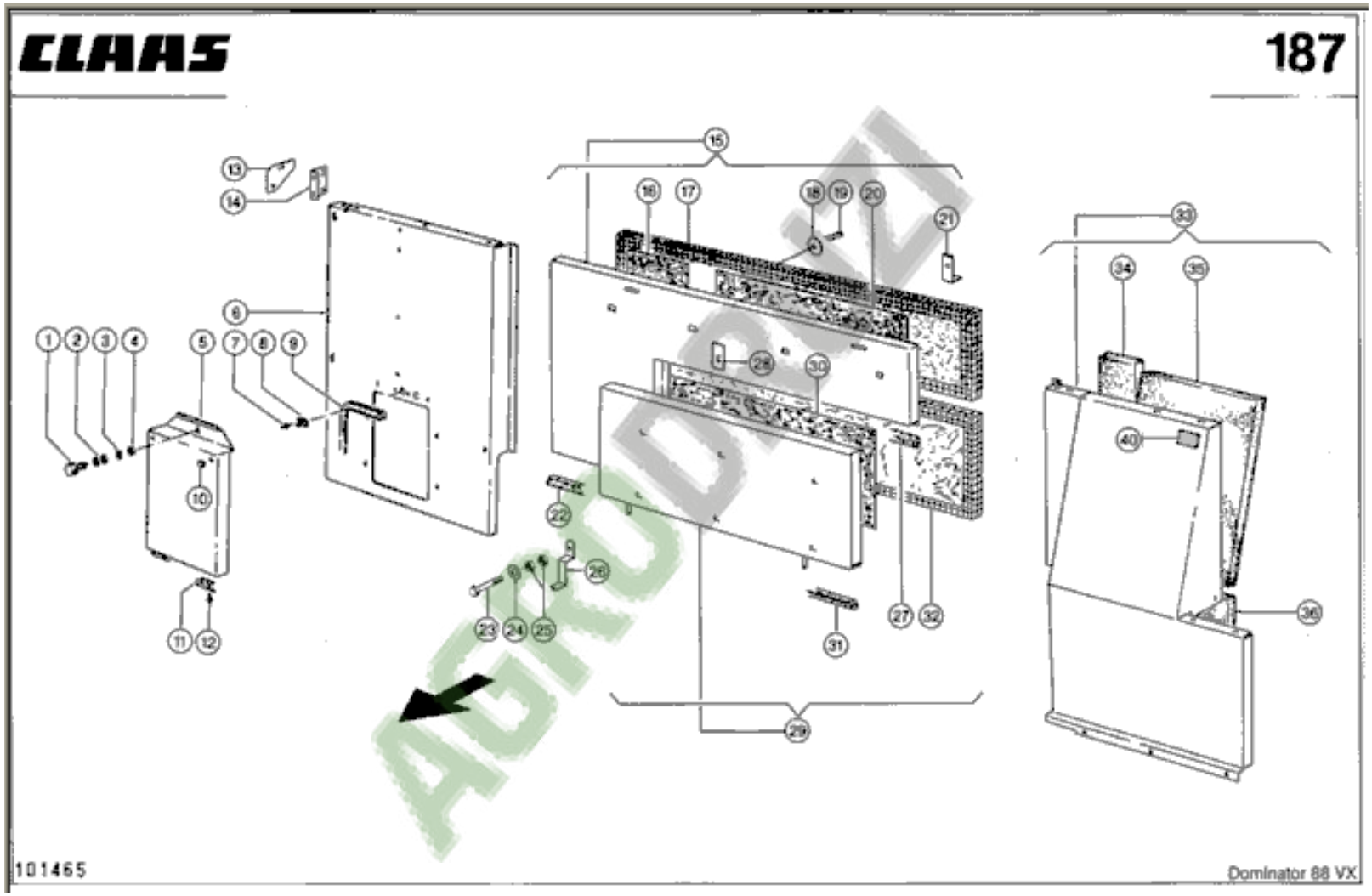
CLAAS
187
101465
Dominator 88 VX

CLAAS

bei Serie "CLASSIC"

188

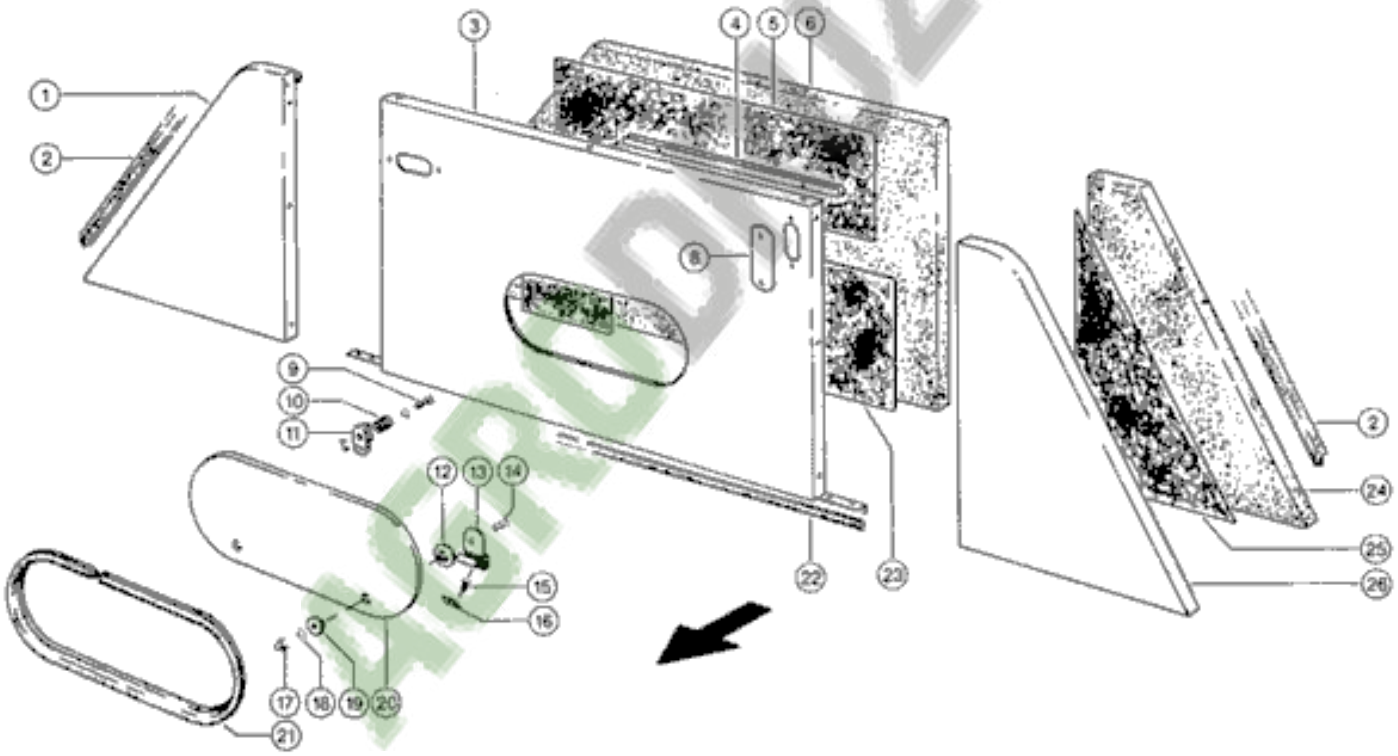


101466

Dominator 88 VX

AGRODIZI

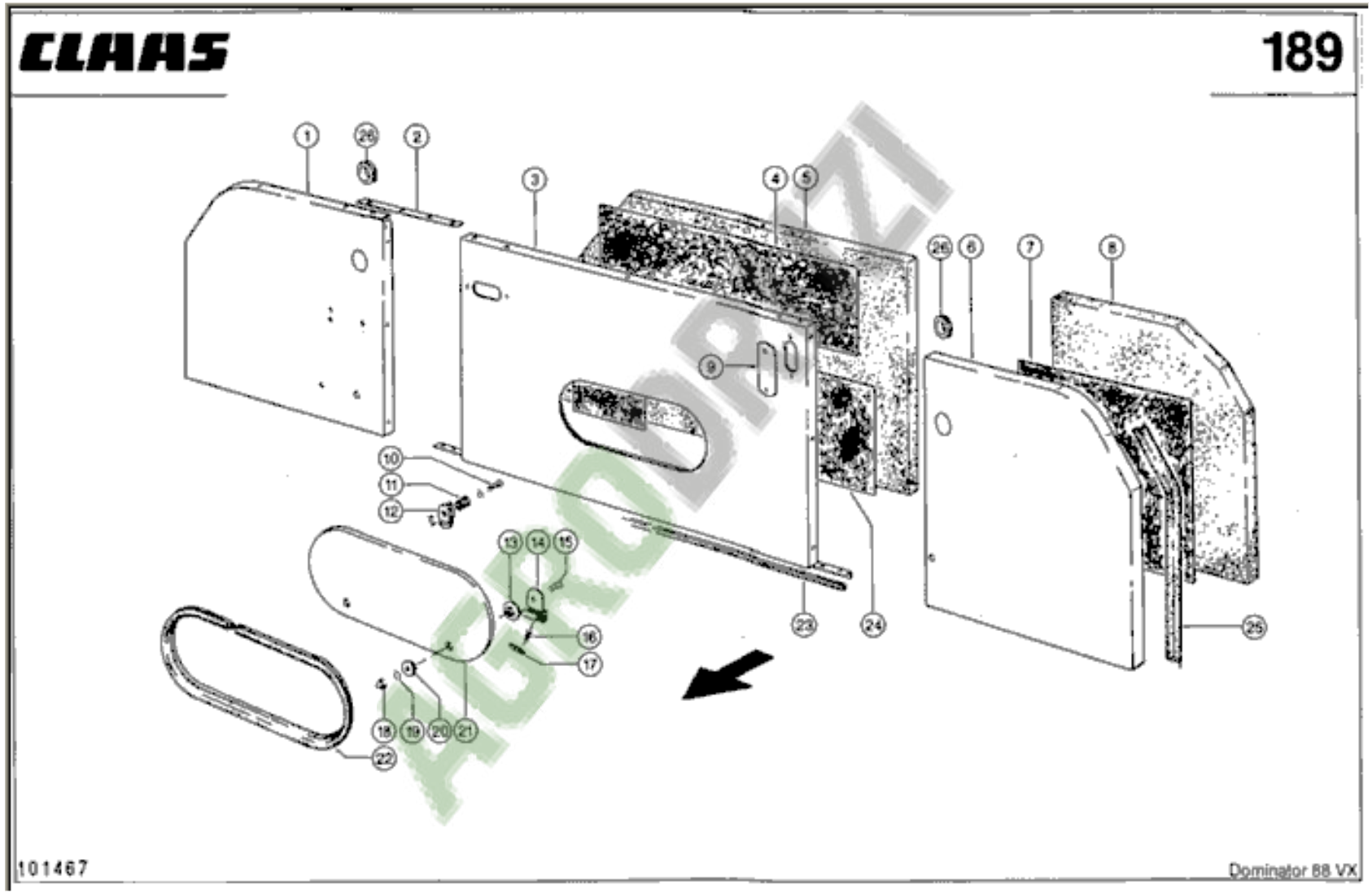
CLAAS
189
1
26
2
3
4
5
26
6
7
8
9
10
11
12
13
14
15
16
17
18
19
20
21
22
23
24
25
101467
Dominator 88 VX

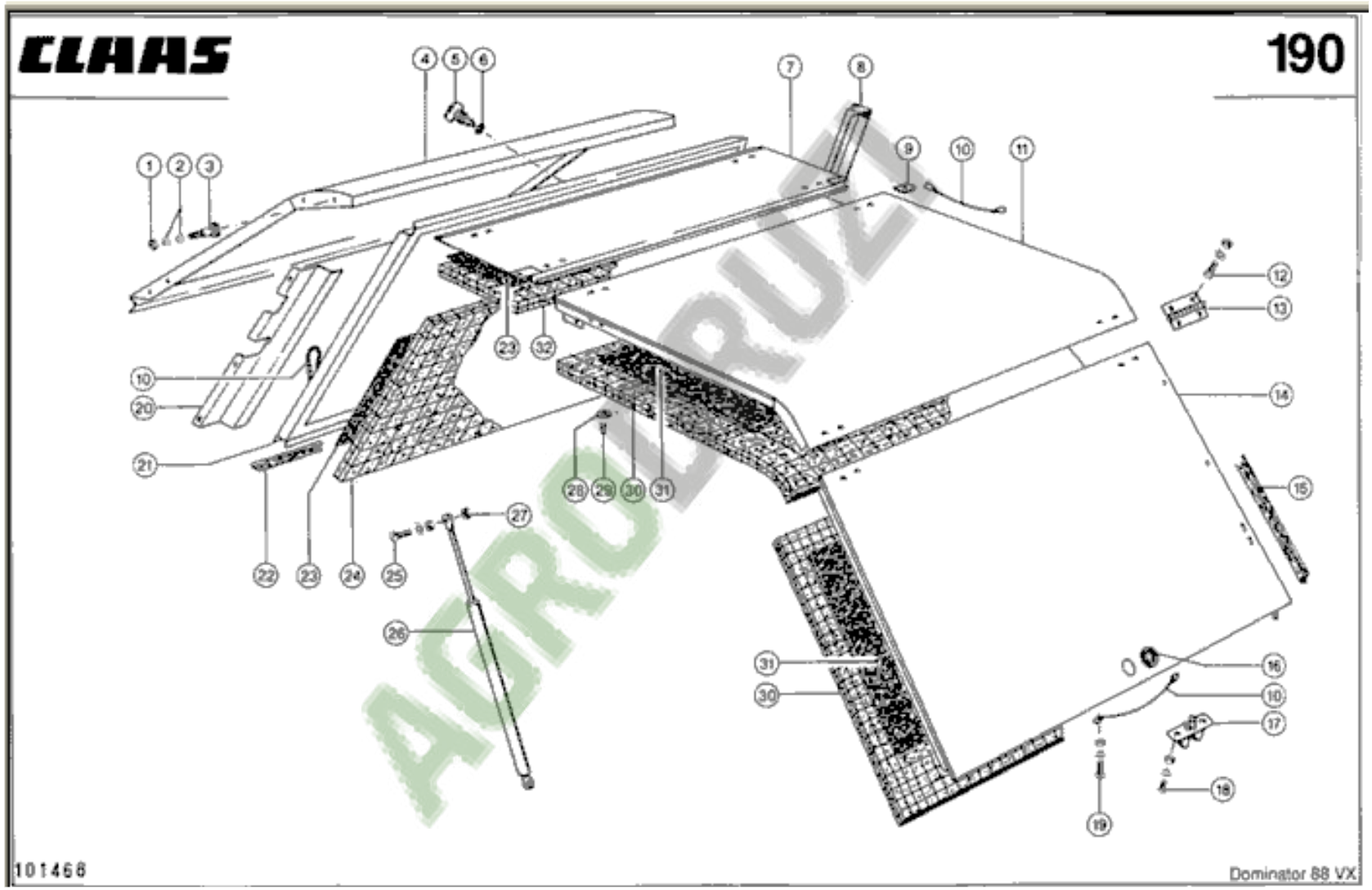
CLAAS
190
101468
Dominator 88 VX

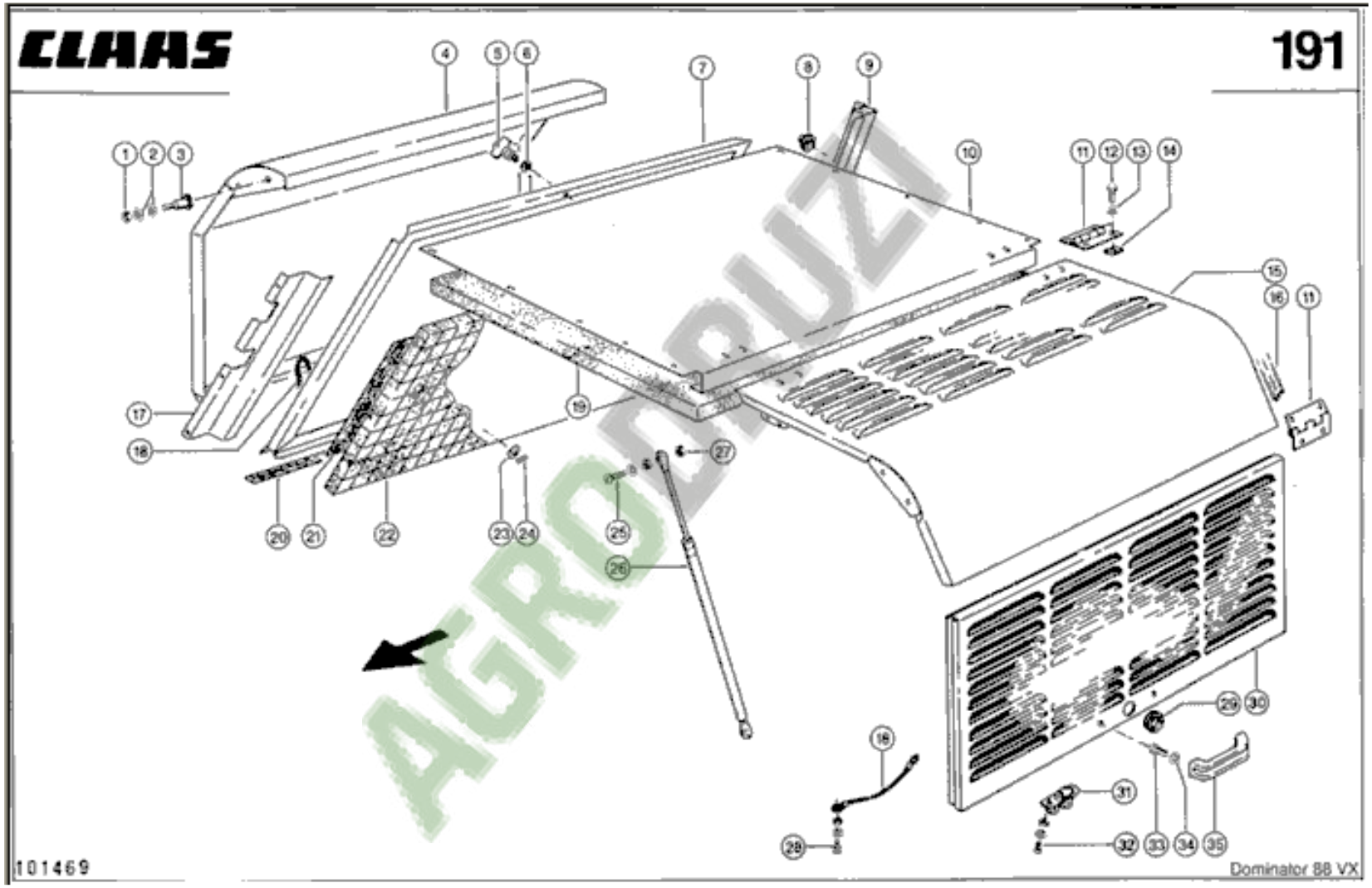


AGRODRUZI

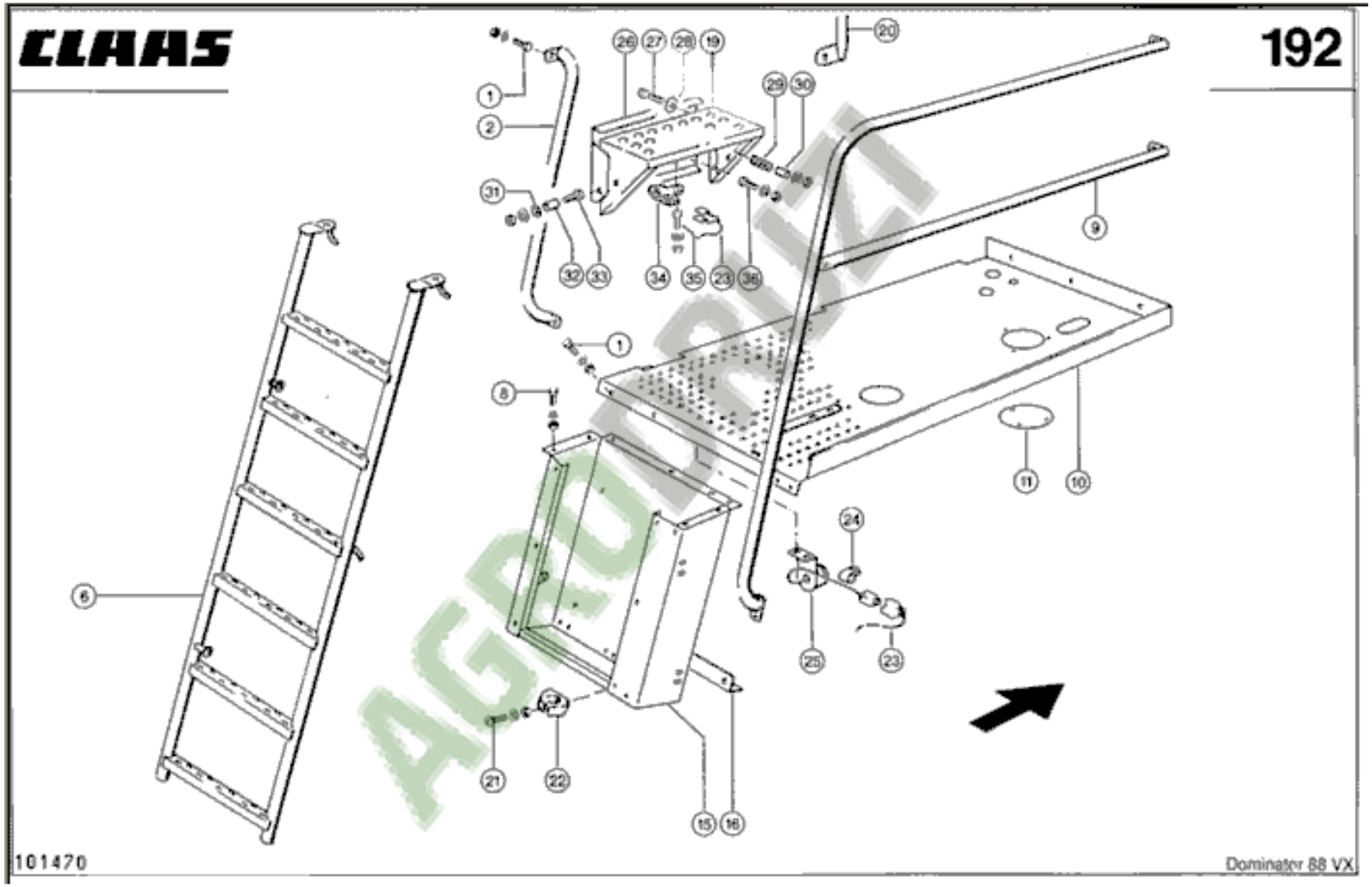
CLAAS
192
101470
Dominator 88 VX

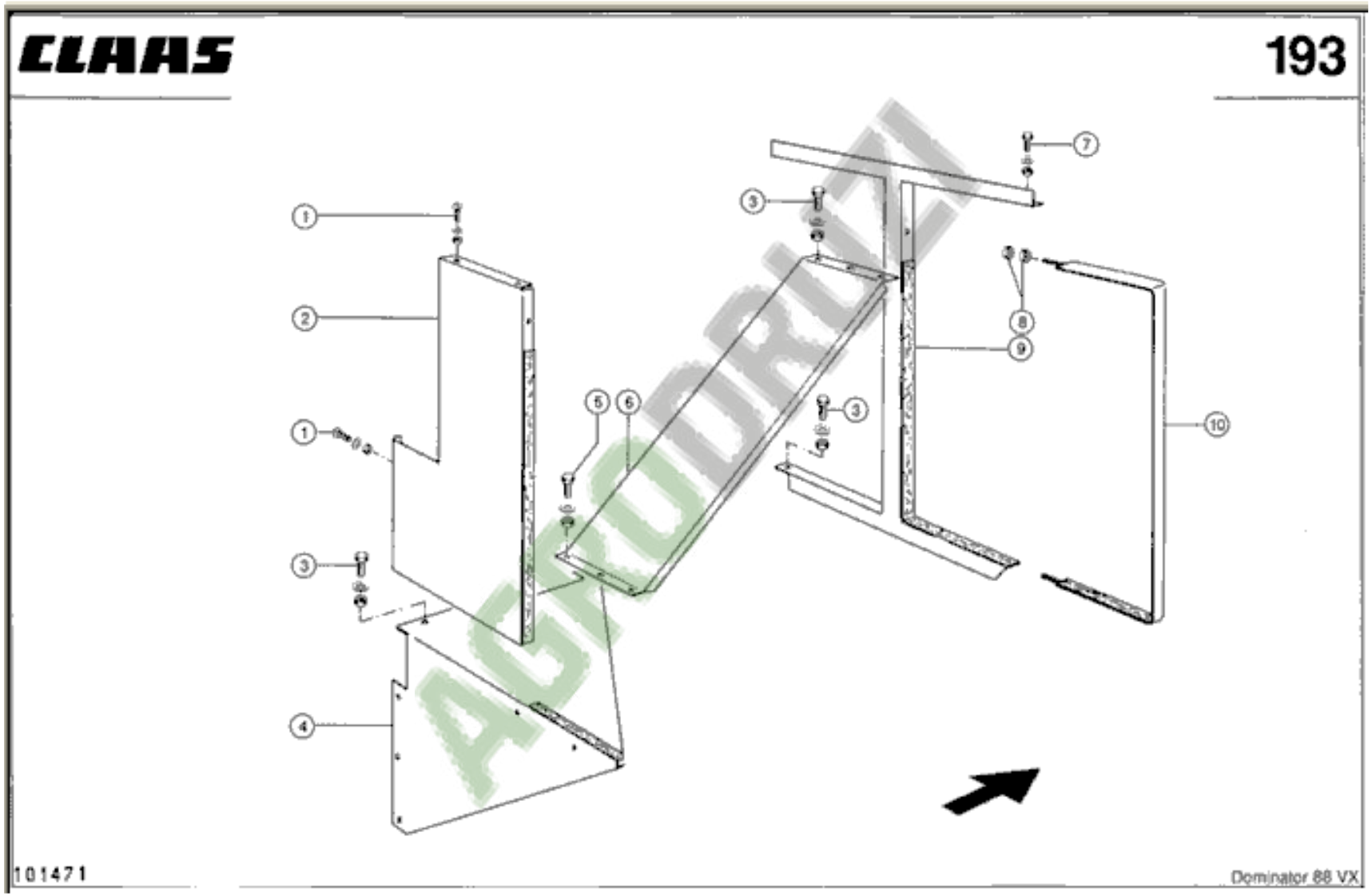
CLAAS
193
1
2
1
3
4
5
6
3
7
8
9
3
10
101471
Dominator 88 VX

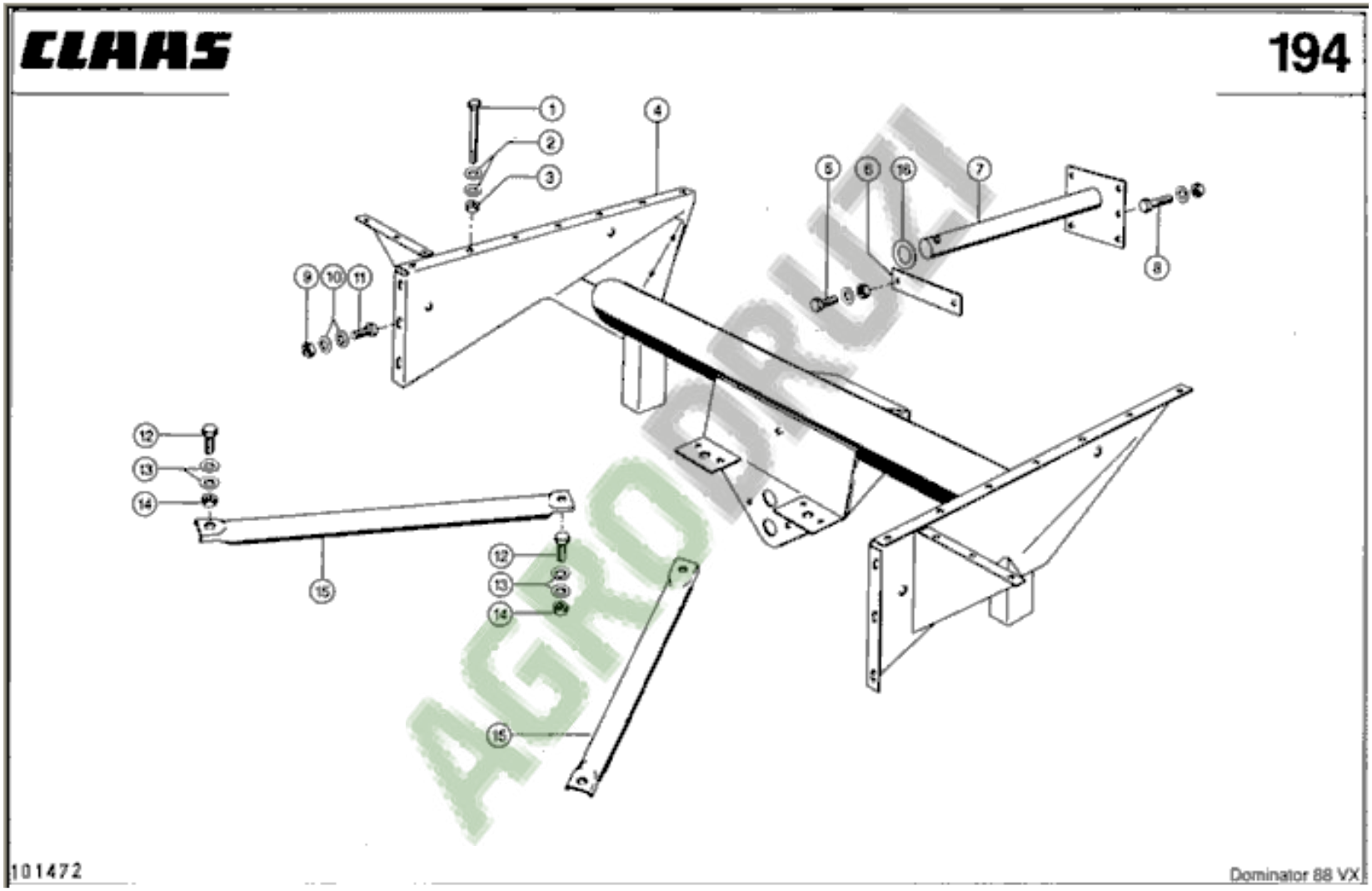
CLAAS
194
1
2
3
4
5
6
16
7
8
9
10
11
12
13
14
15
12
13
14
15
101472
Dominator 88 VX

AGRODRUZI

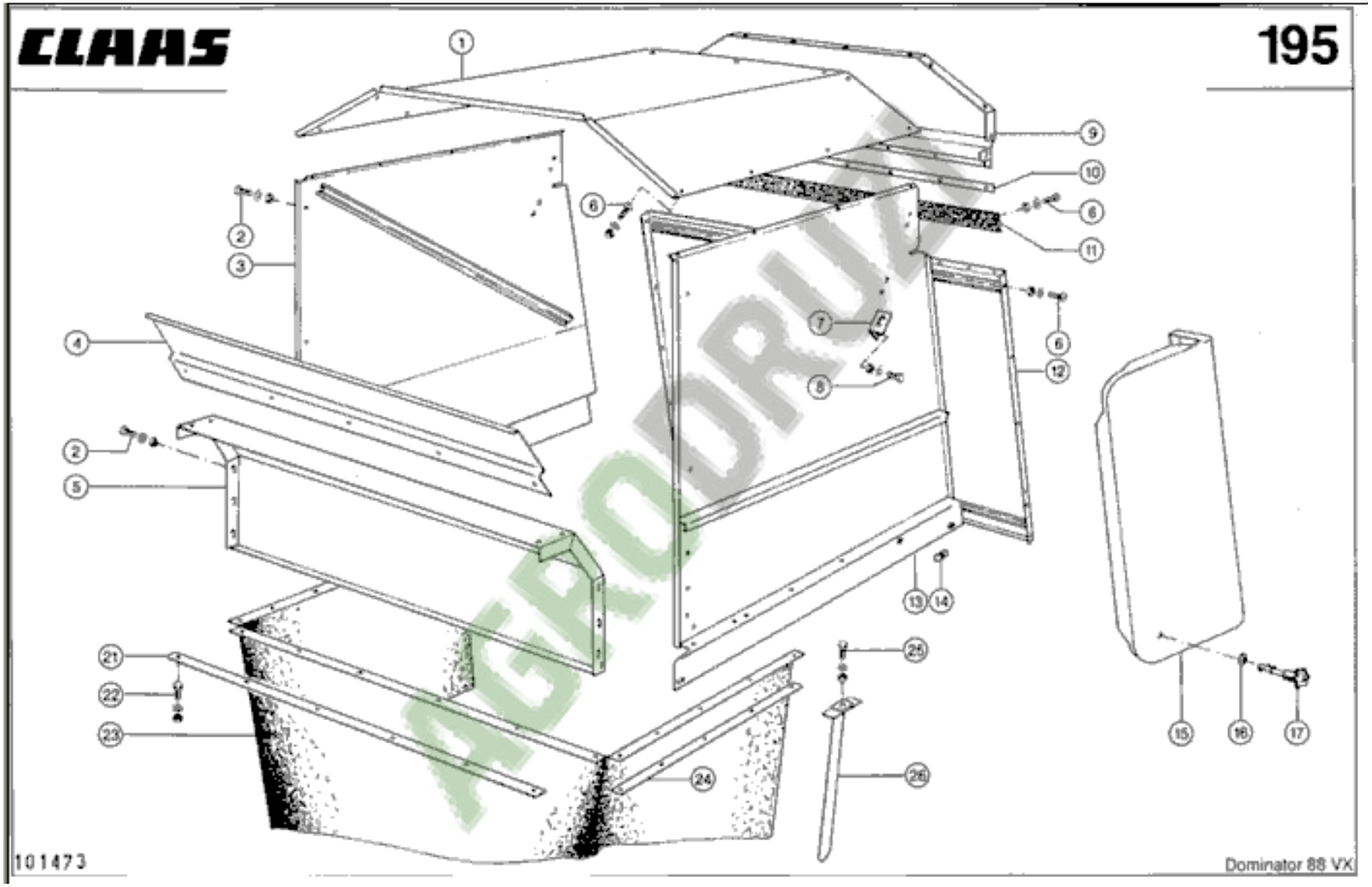
CLAAS
195
1
2
3
4
5
6
7
8
9
10
11
12
13
14
15
16
17
21
22
23
24
25
26
101473
Dominator 88 VX

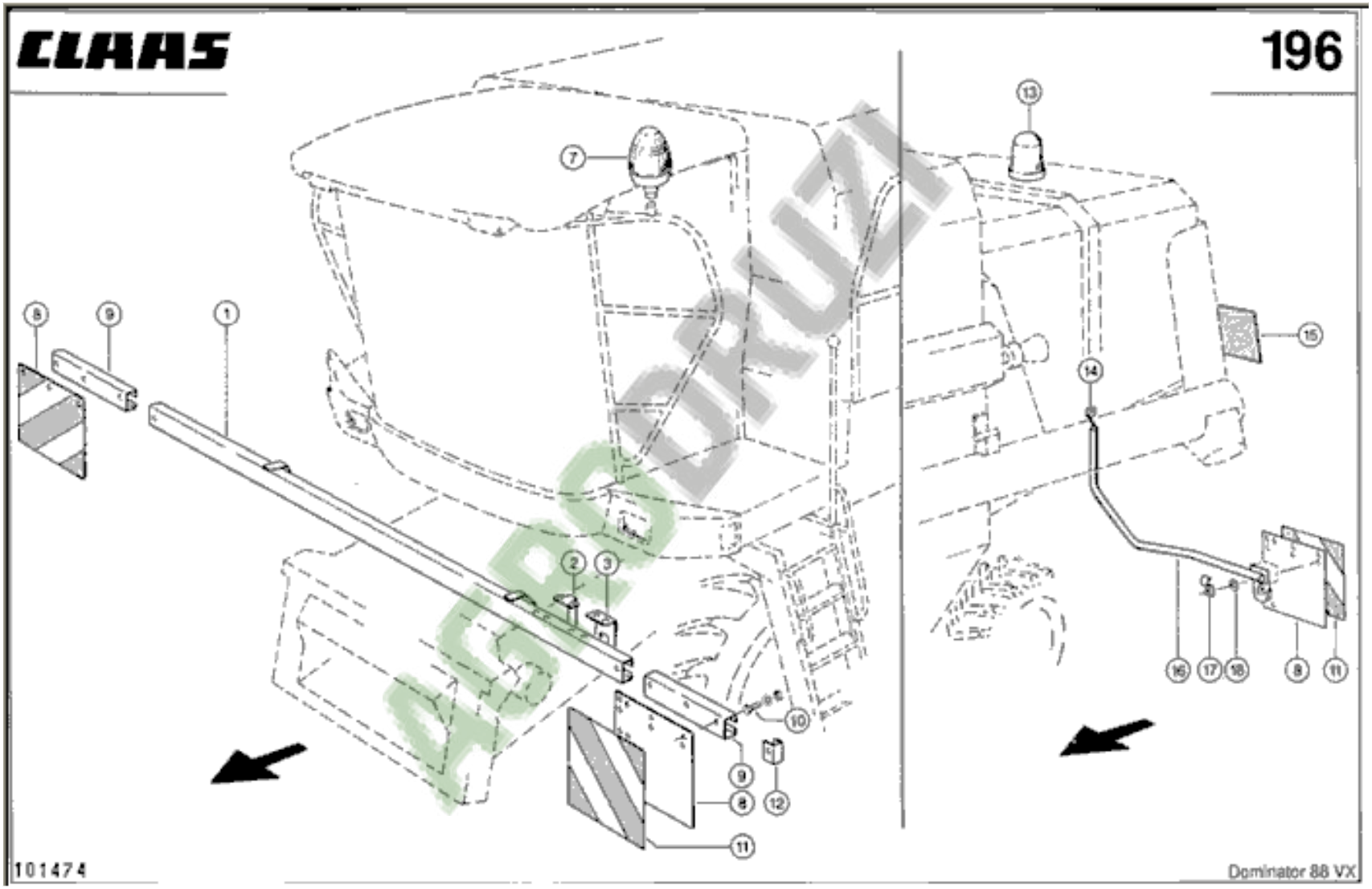


AGRODRUZI

CLAAS

197

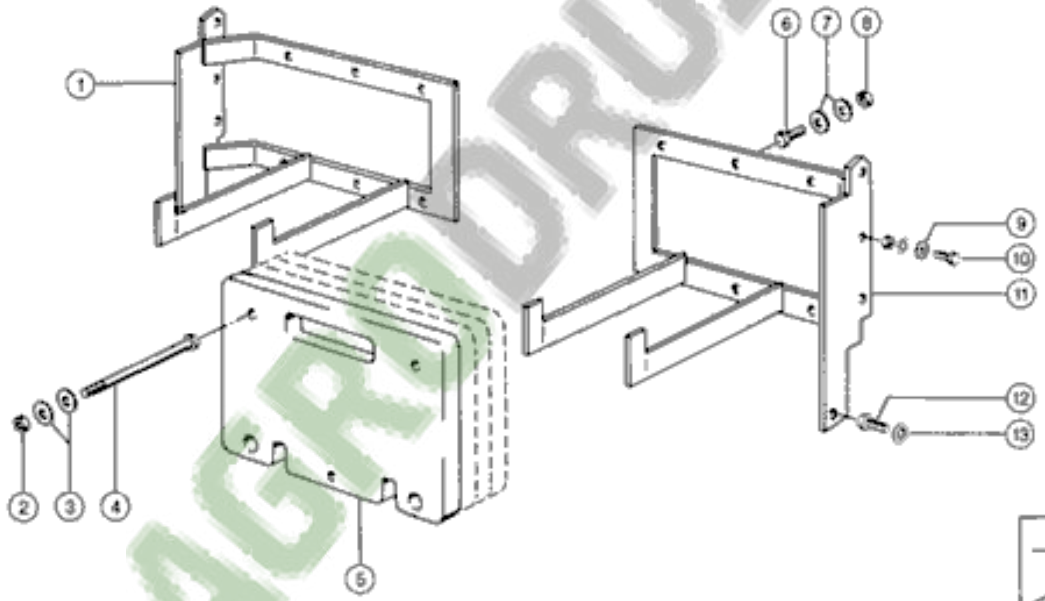


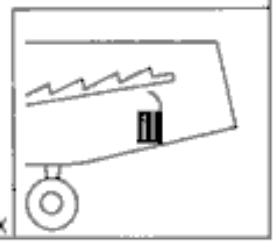

101475

Dominator 88 VX

AGRODRUZI

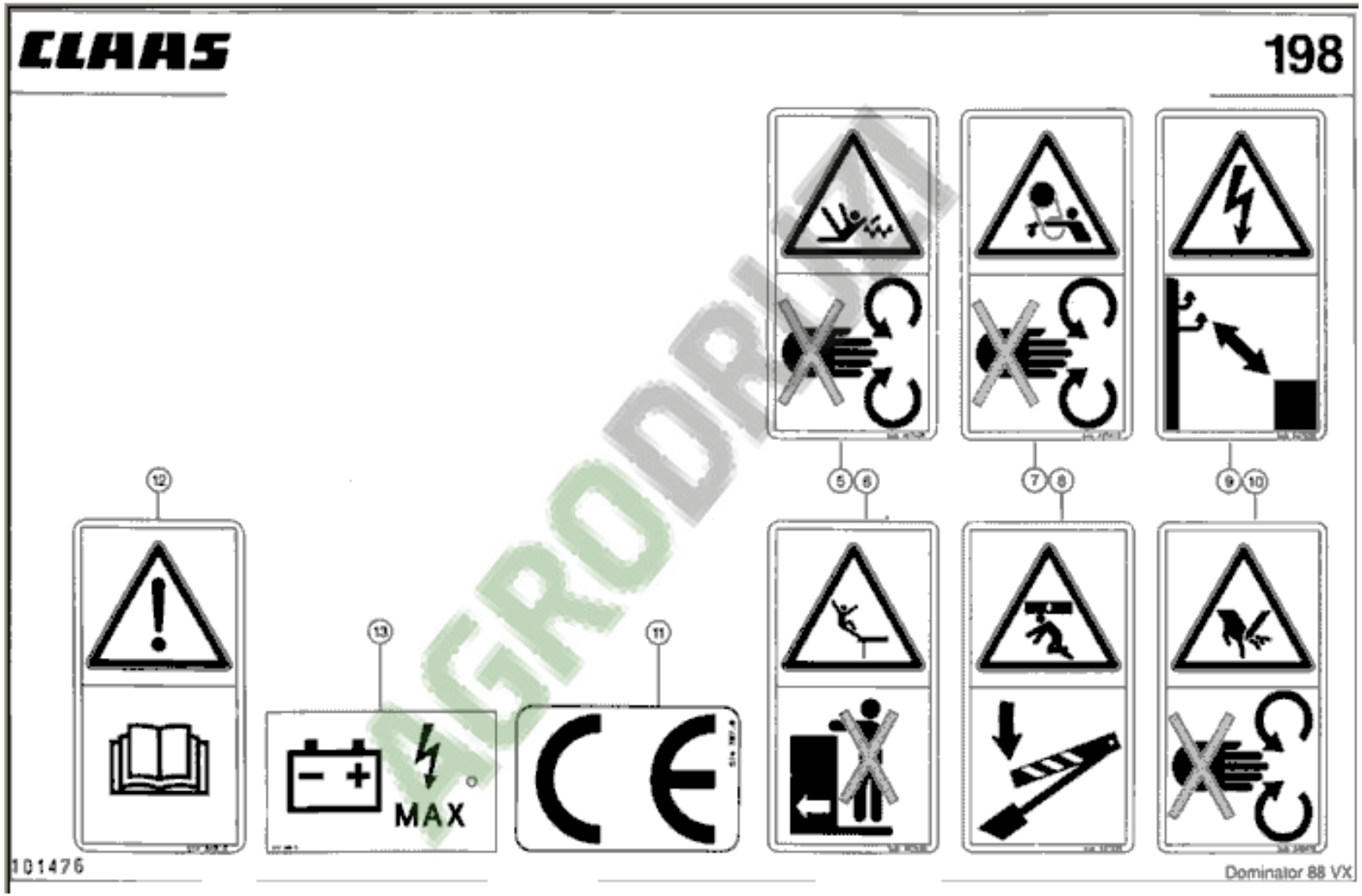
CLAAS
198
12
13
11
5 6
7 8
9 10
MAX
101476
Dominator 88 VX

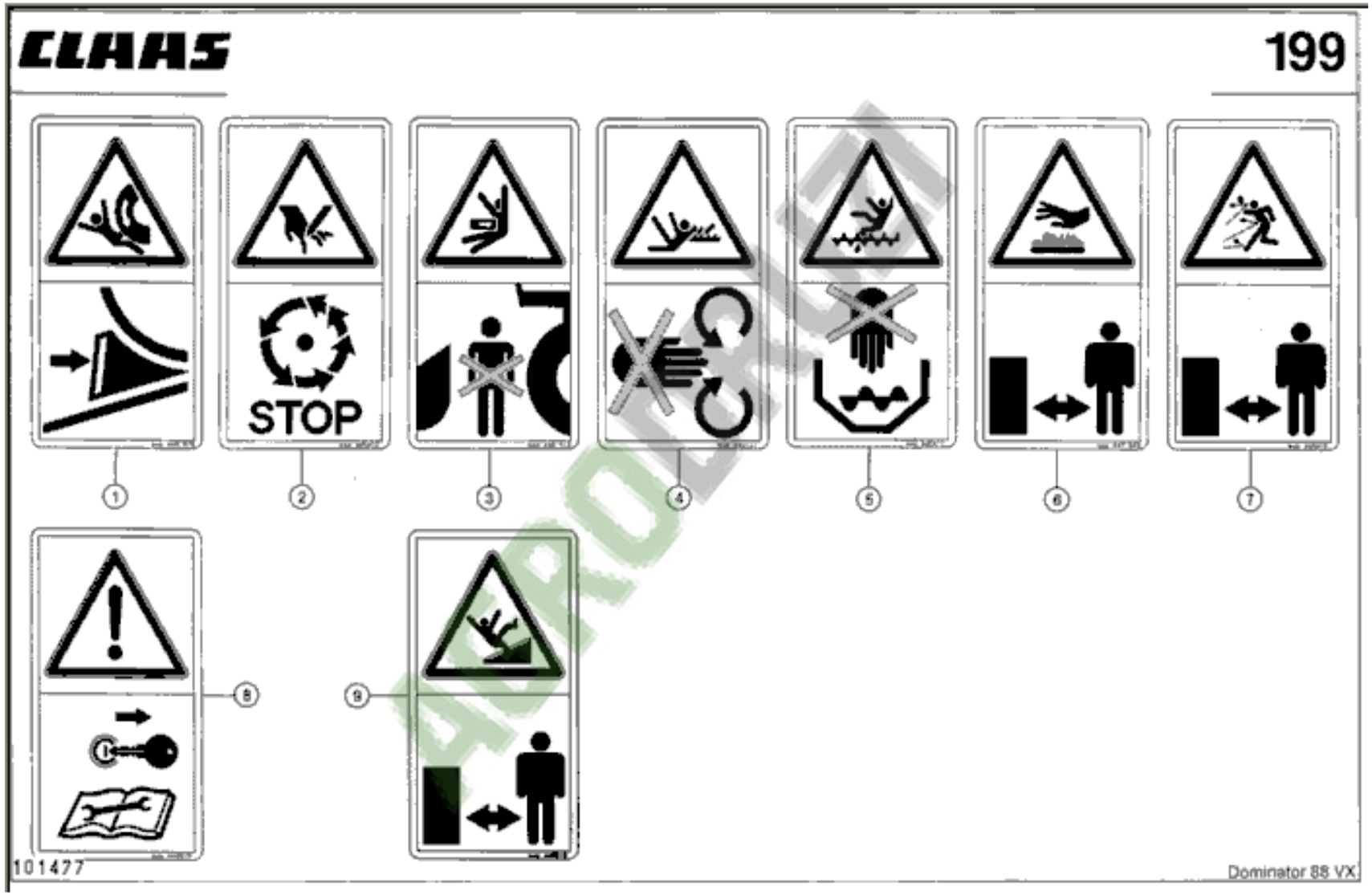
CLAAS
199
STOP
1
2
3
4
5
6
7
8
9
101477
Dominator 88 VX

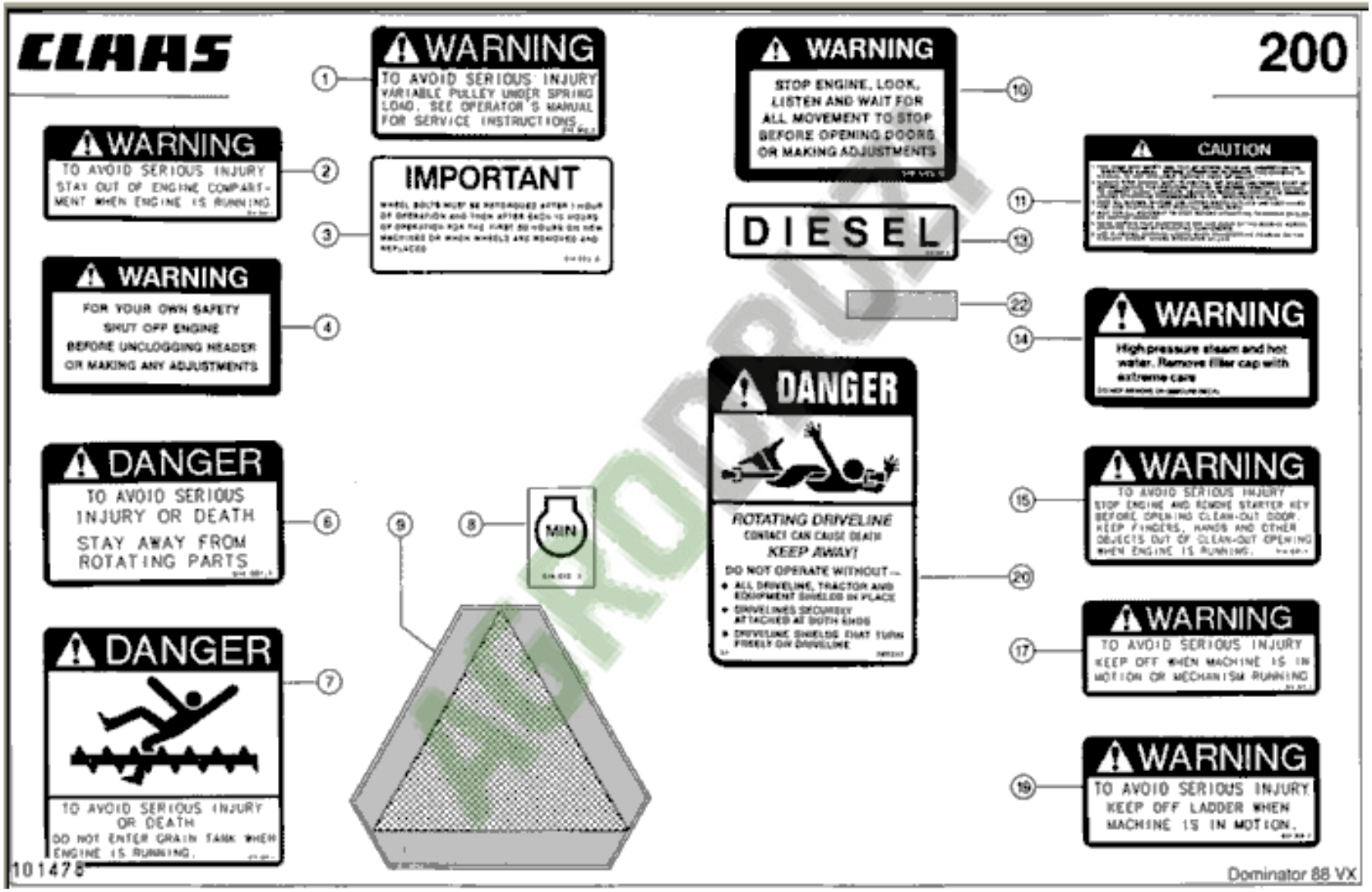
CLAAS
200
1
WARNING
TO AVOID SERIOUS INJURY VARIABLE PULLEY UNDER SPRING LOAD, SEE OPERATOR'S MANUAL FOR SERVICE INSTRUCTIONS.
2
WARNING
TO AVOID SERIOUS INJURY STAY OUT OF ENGINE COMPARTMENT WHEN ENGINE IS RUNNING.
3
IMPORTANT
4
WARNING
FOR YOUR OWN SAFETY SHUT OFF ENGINE BEFORE UNCLOGGING HEADER OR MAKING ANY ADJUSTMENTS
6
DANGER
TO AVOID SERIOUS INJURY OR DEATH
STAY AWAY FROM ROTATING PARTS
7
DANGER
TO AVOID SERIOUS INJURY OR DEATH
DO NOT ENTER GRAIN TANK WHEN ENGINE IS RUNNING.
8
MIN
9
10
WARNING
STOP ENGINE, LOOK, LISTEN AND WAIT FOR ALL MOVEMENT TO STOP BEFORE OPENING DOORS OR MAKING ADJUSTMENTS
11
CAUTION
13
DIESEL
22
14
WARNING
High pressure steam and hot water. Remove filler cap with extreme care
20
DANGER
ROTATING DRIVELINE
CONTACT CAN CAUSE DEATH
KEEP AWAY!
DO NOT OPERATE WITHOUT —
• ALL DRIVELINE, TRACTOR AND EQUIPMENT SHIELDS IN PLACE
• DRIVELINES SECURELY ATTACHED AT BOTH ENDS
• DRIVELINE SHIELDS THAT TURN FREELY ON DRIVELINE
15
WARNING
TO AVOID SERIOUS INJURY STOP ENGINE AND REMOVE STARTER KEY BEFORE OPENING CLEAN-OUT DOOR. KEEP FINGERS, HANDS AND OTHER OBJECTS OUT OF CLEAN-OUT OPENING WHEN ENGINE IS RUNNING.
17
WARNING
TO AVOID SERIOUS INJURY KEEP OFF WHEN MACHINE IS IN MOTION OR MECHANISM RUNNING
19
WARNING
TO AVOID SERIOUS INJURY KEEP OFF LADDER WHEN MACHINE IS IN MOTION.
101478
Dominator 88 VX

1

3

4

5

6

2

AGRODRUZI

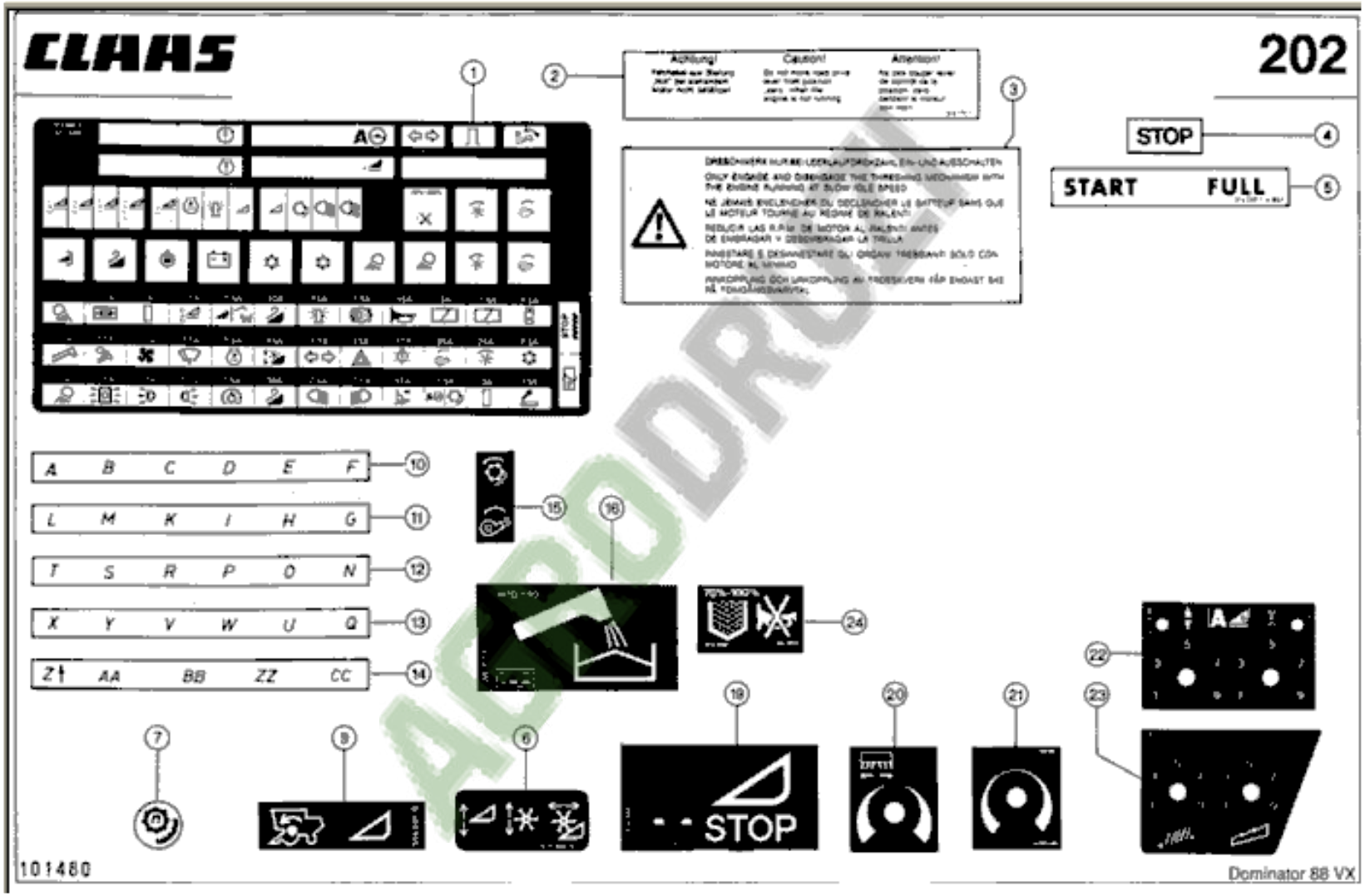
CLAAS
202
STOP
START
FULL
A B C D E F
L M K I H G
T S R P O N
X Y V W U Q
Z AA BB ZZ CC
STOP
101480
Dominator 88 VX

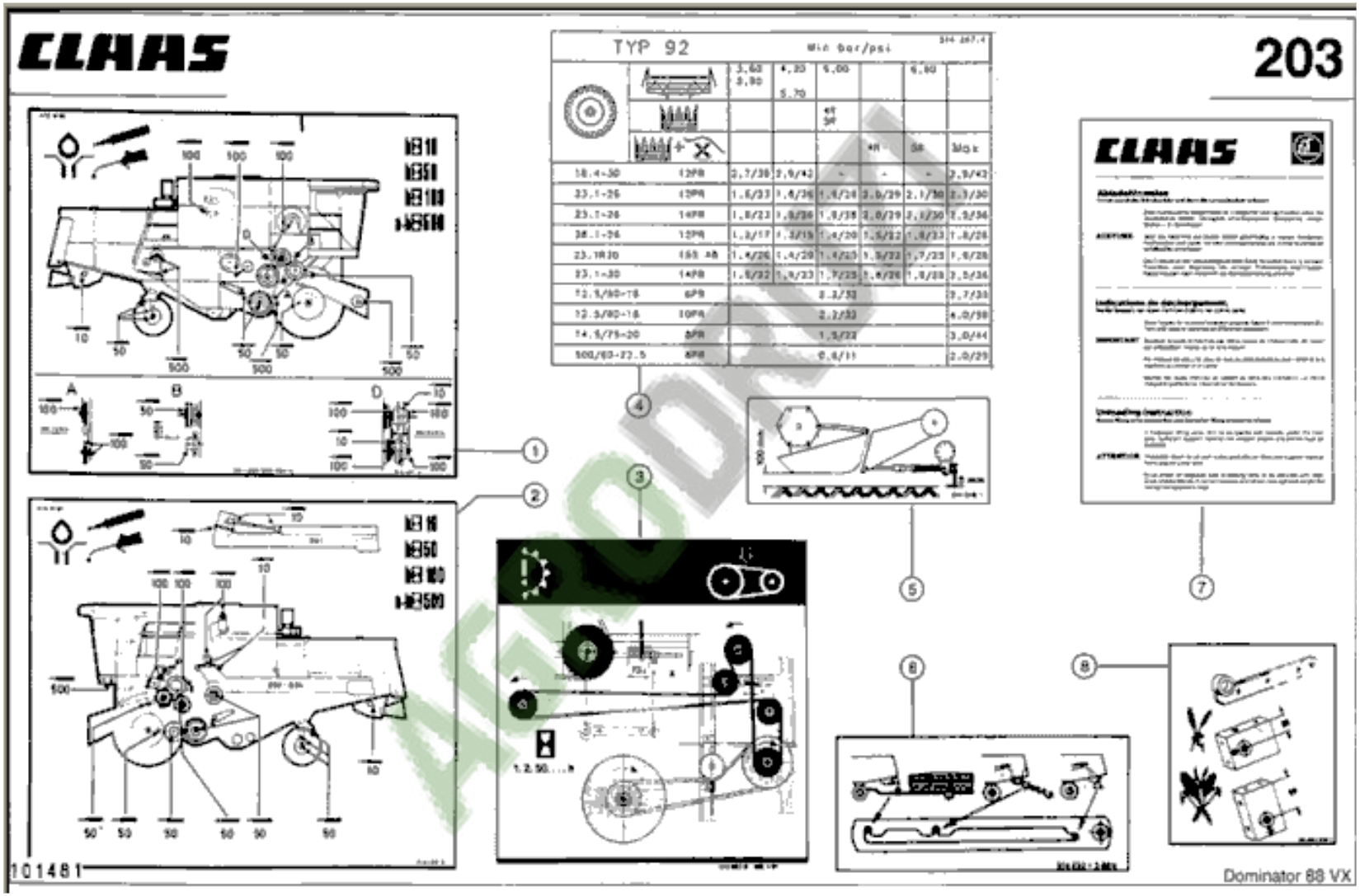
CLAAS
203
TYP 92
Min bar/psi
Max
101481
Dominator 88 VX

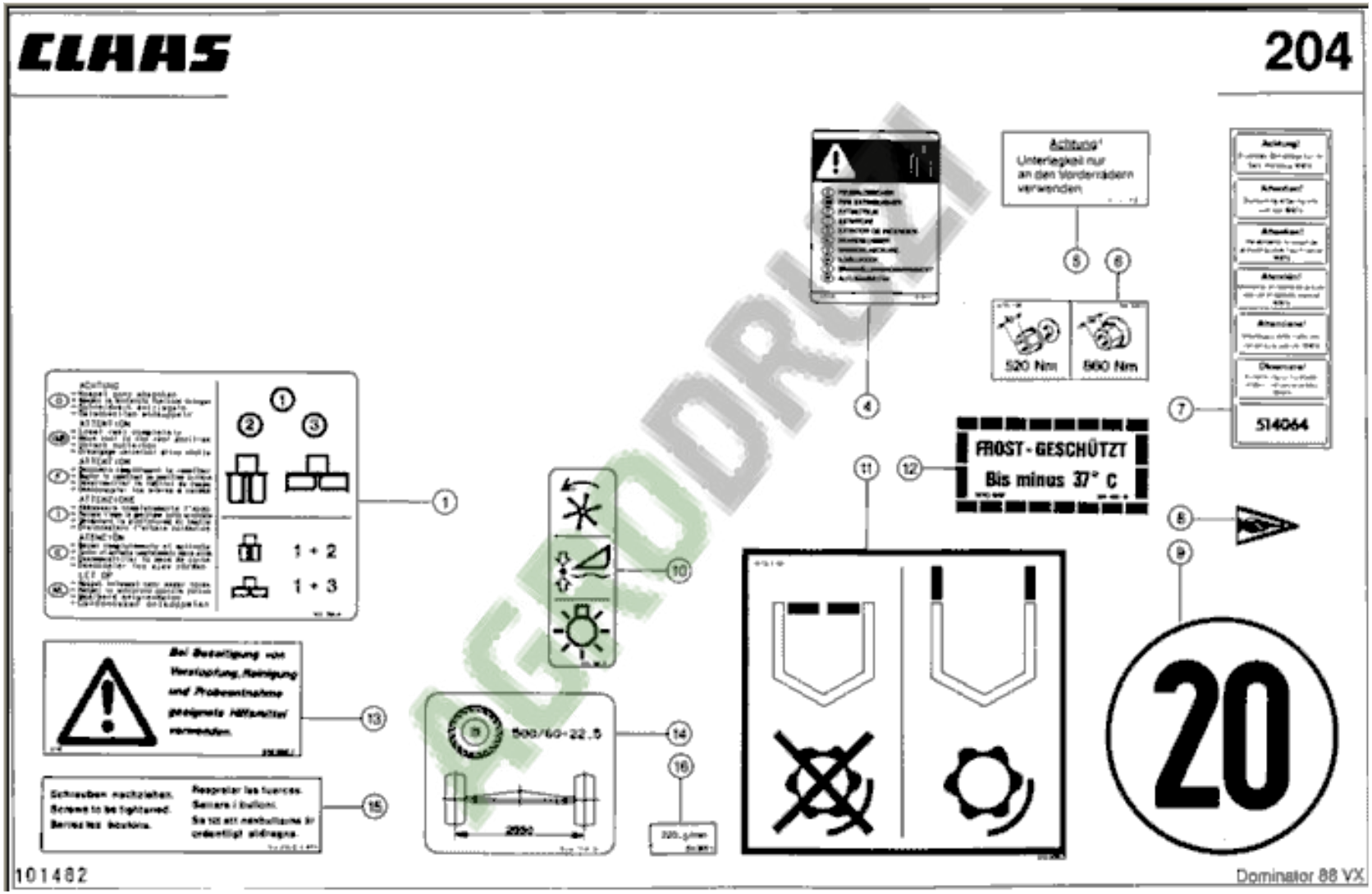
CLAAS
204
Achtung!
Unterlegkeil nur
an den Vorderrädern
verwenden
520 Nm
660 Nm
514064
FROST - GESCHÜTZT
Bis minus 37° C
1 + 2
1 + 3
500/60-22.5
2550
20
101482
Dominator 88 VX

# Hydraulik

AGRODRUZI

CLAAS

205

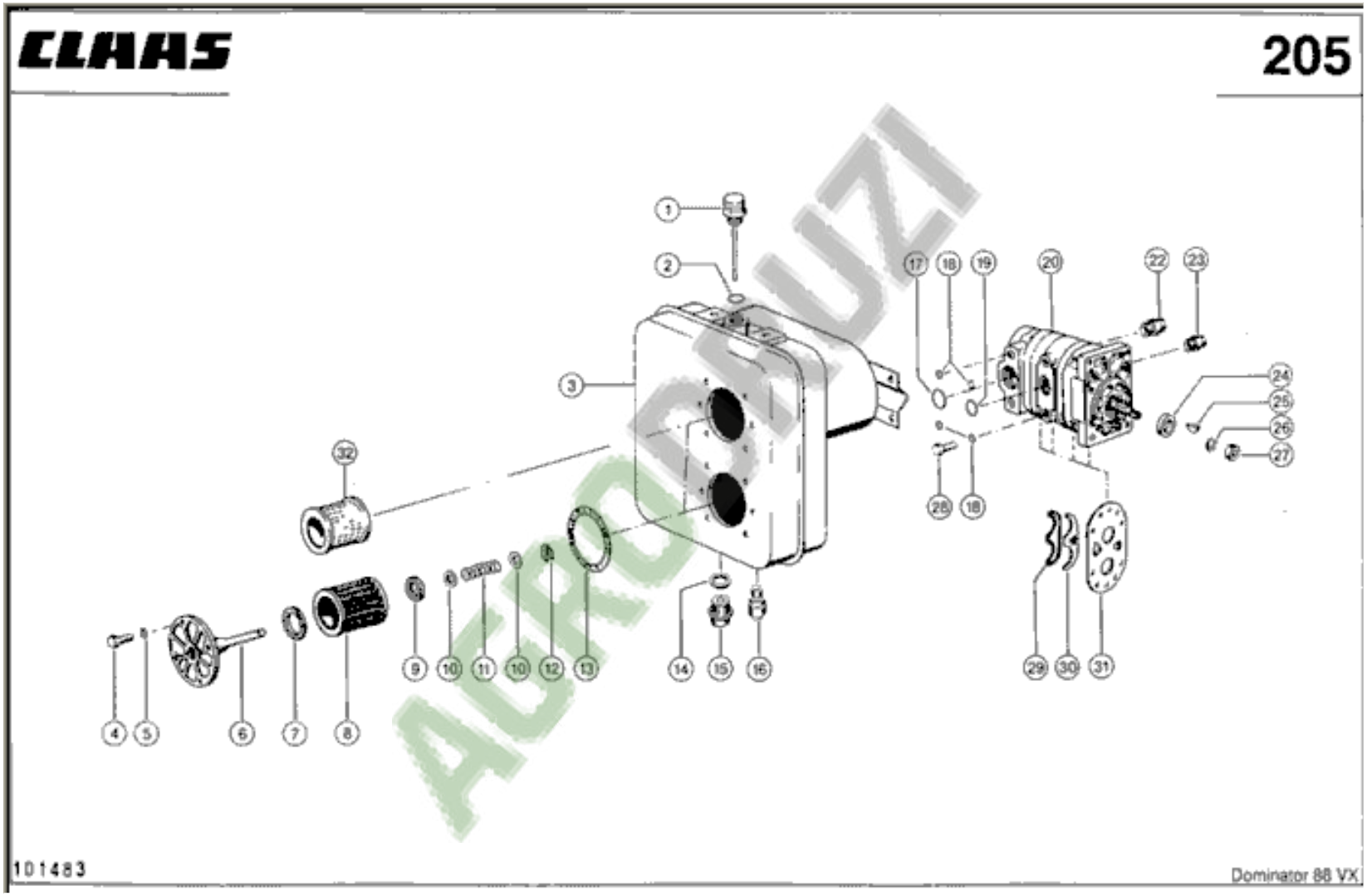


AGRODAUZI

CLAAS

206

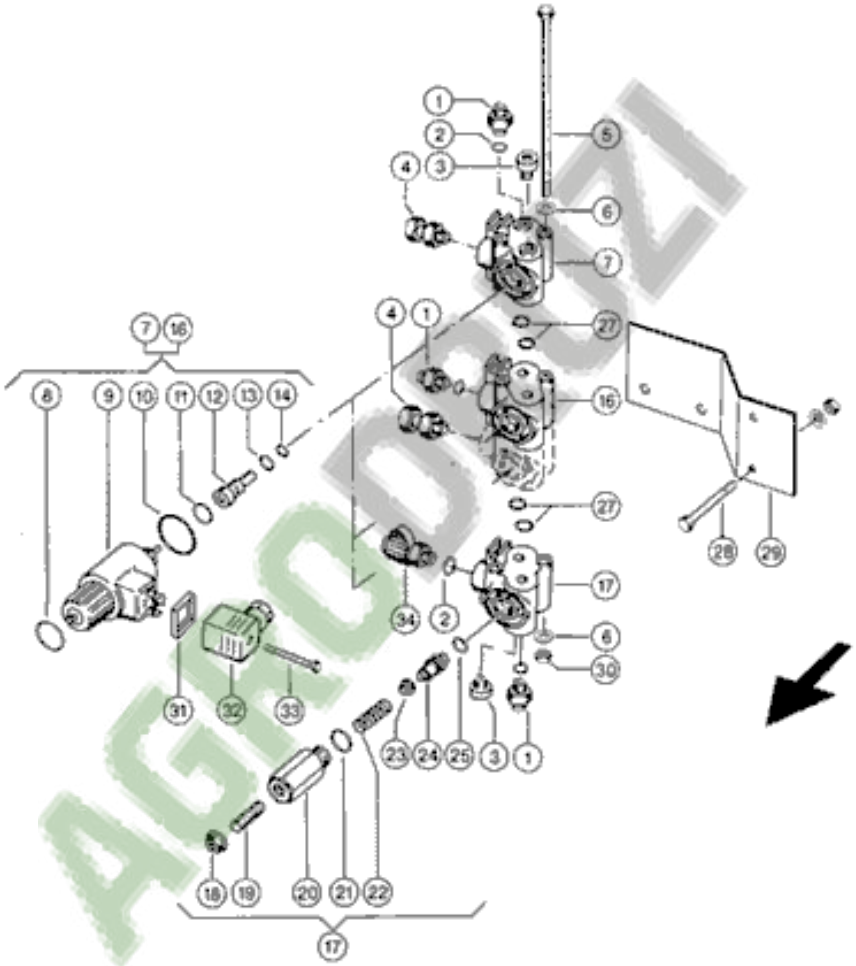


101484

Dominator 88 VX

AGRODRUZI

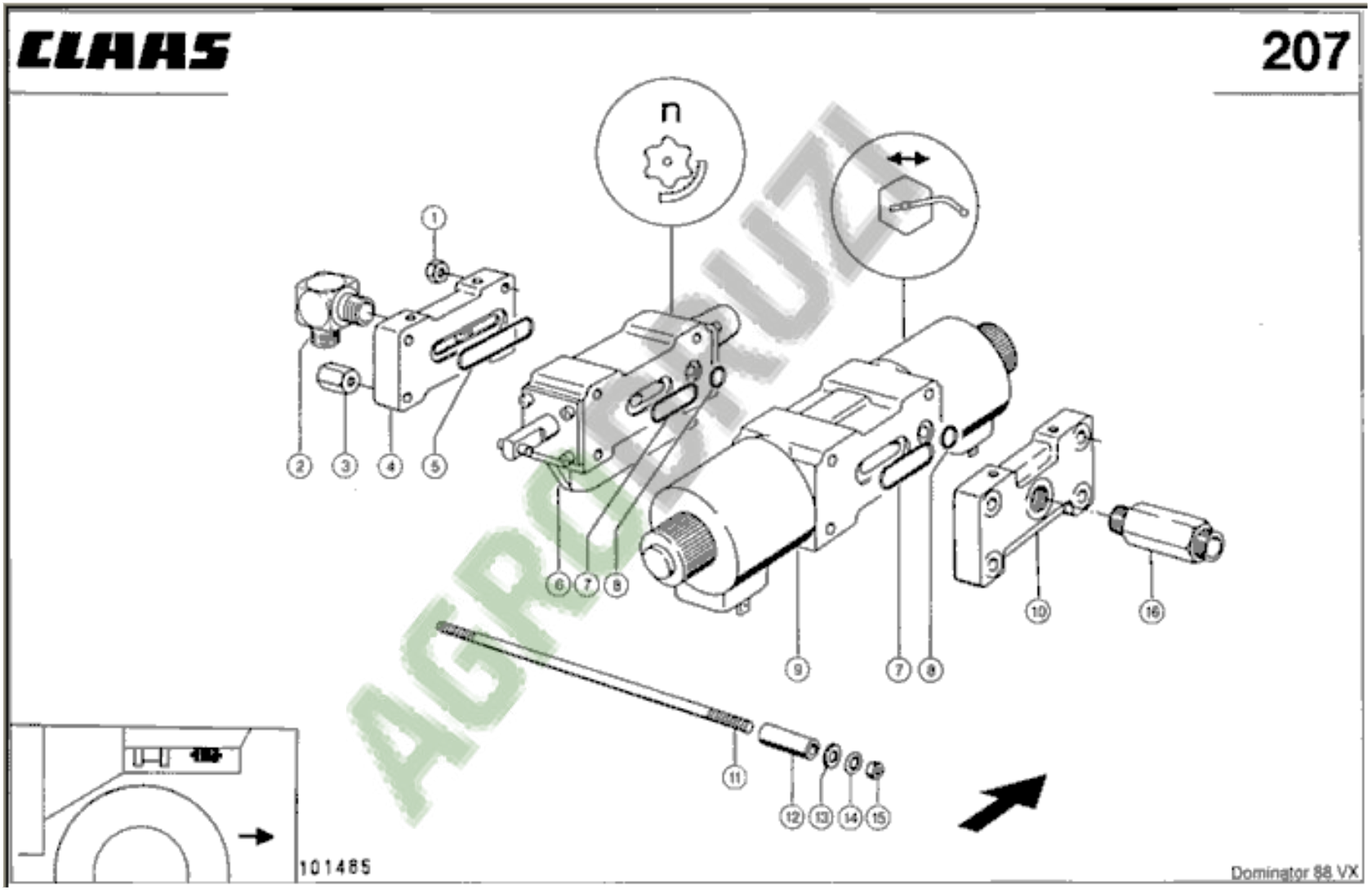
CLAAS
207
n
1
2
3
4
5
6
7
8
9
7
8
10
16
11
12
13
14
15
101465
Dominator 88 VX

AGROCRUZ

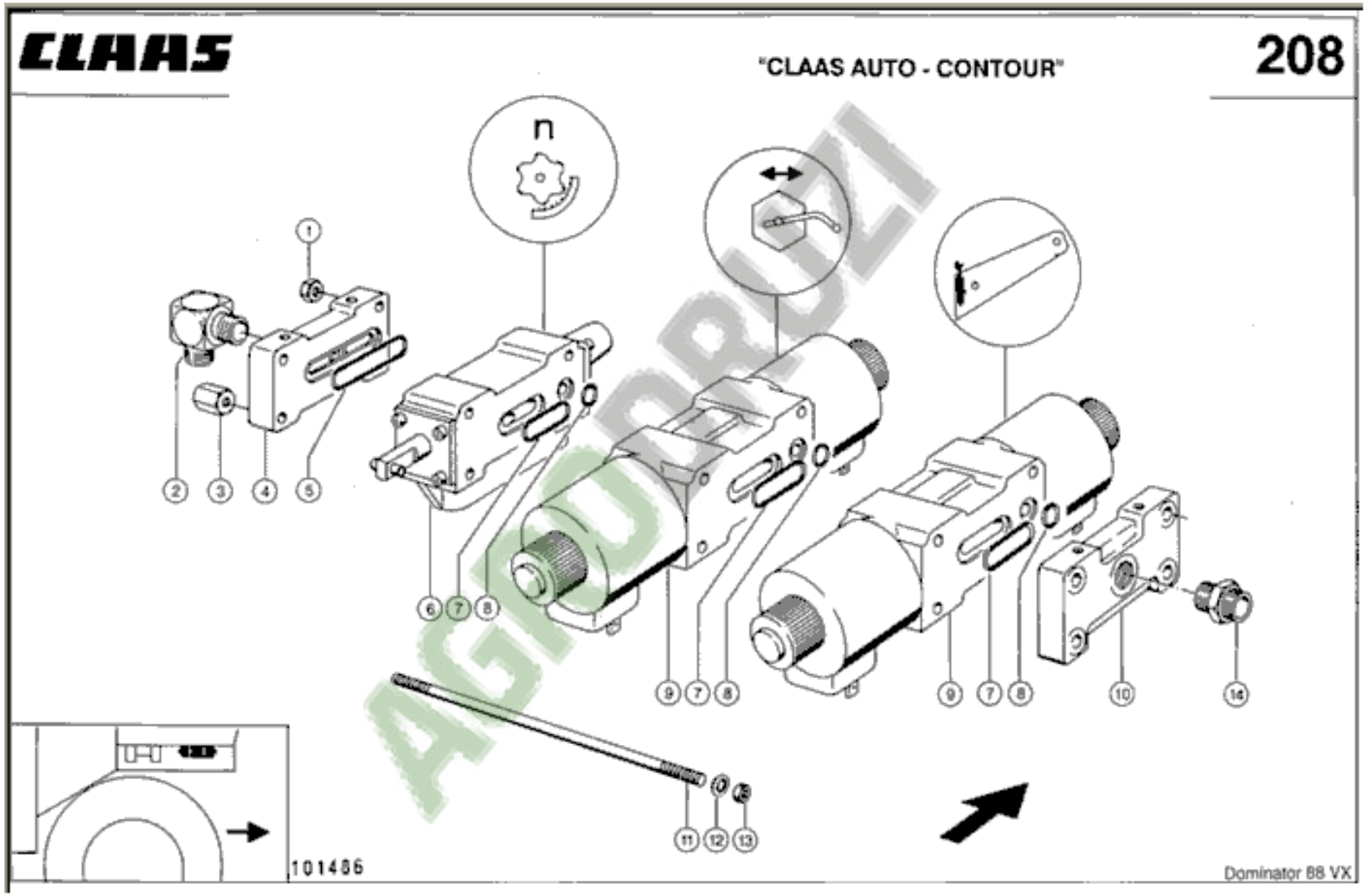
CLAAS
"CLAAS AUTO - CONTOUR"
208
n
1
2
3
4
5
6
7
8
9
10
11
12
13
14
101486
Dominator 88 VX

AGRODRUZI

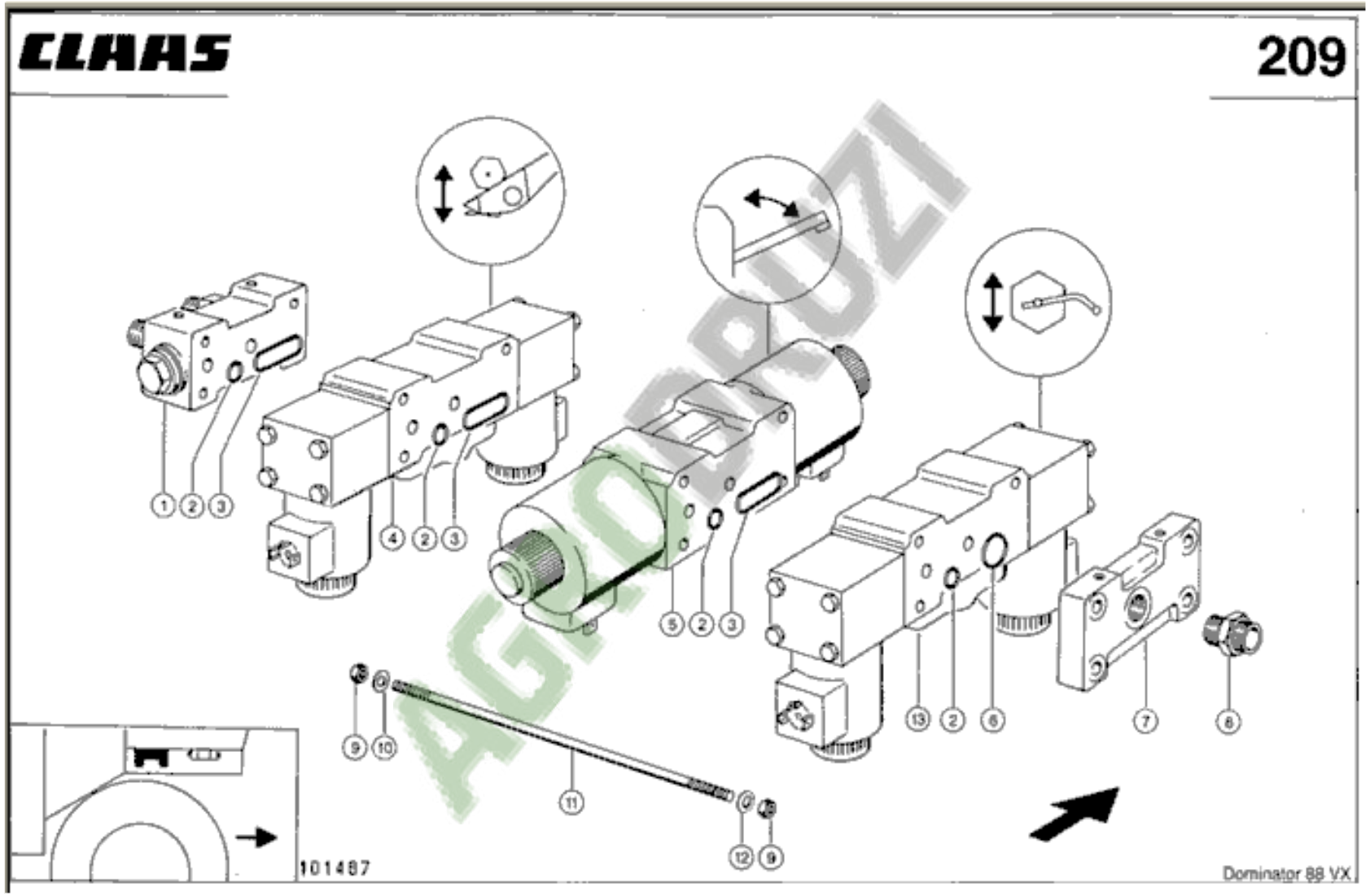
CLAAS
209
1
2
3
4
2
3
5
2
3
13
2
6
7
8
9
10
11
12
9
101487
Dominator 88 VX

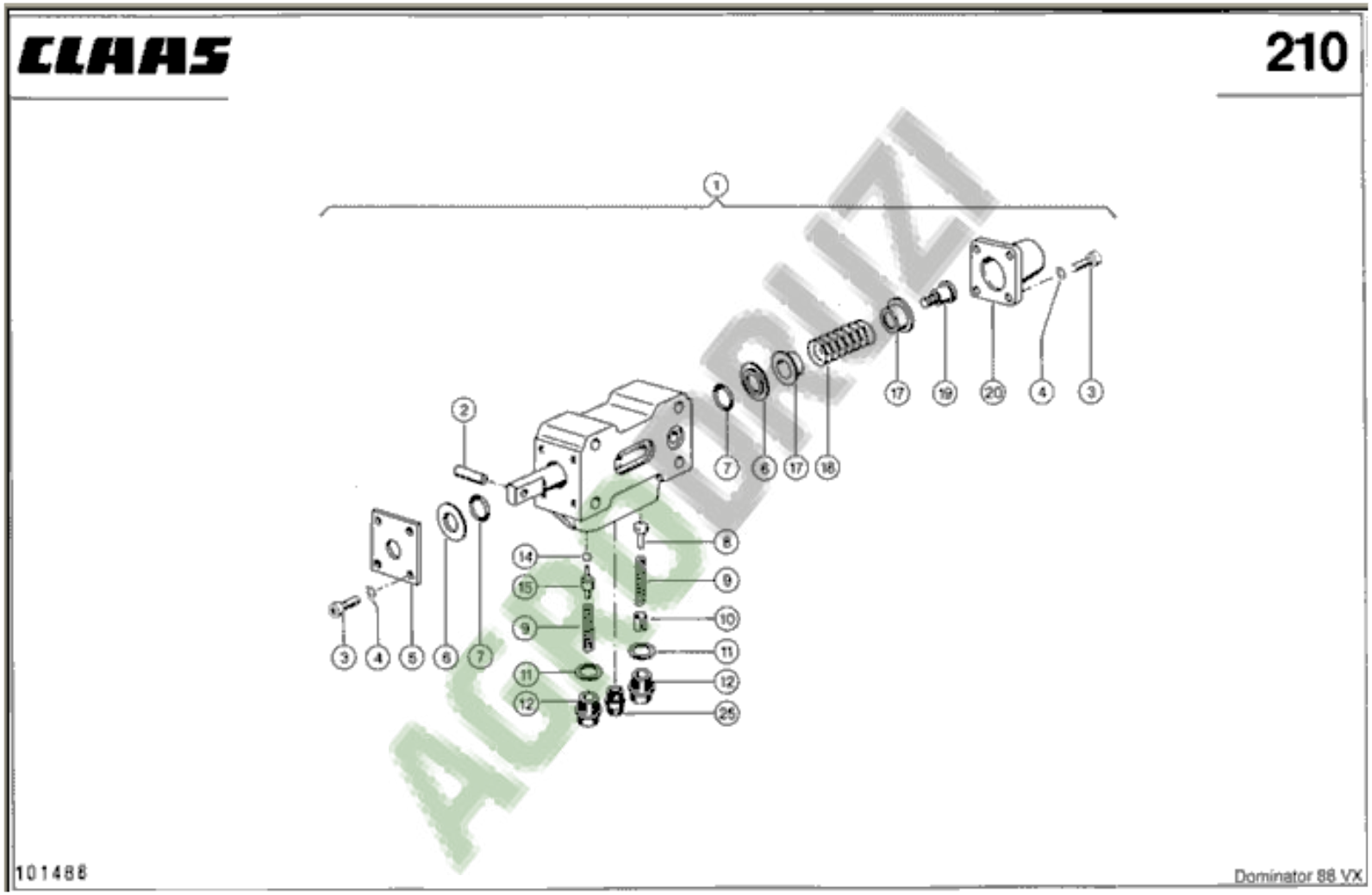
CLAAS
210
1
2
3
4
5
6
7
8
9
10
11
12
14
15
16
17
18
19
20
24
101488
Dominator 88 VX

AGRODRUZI

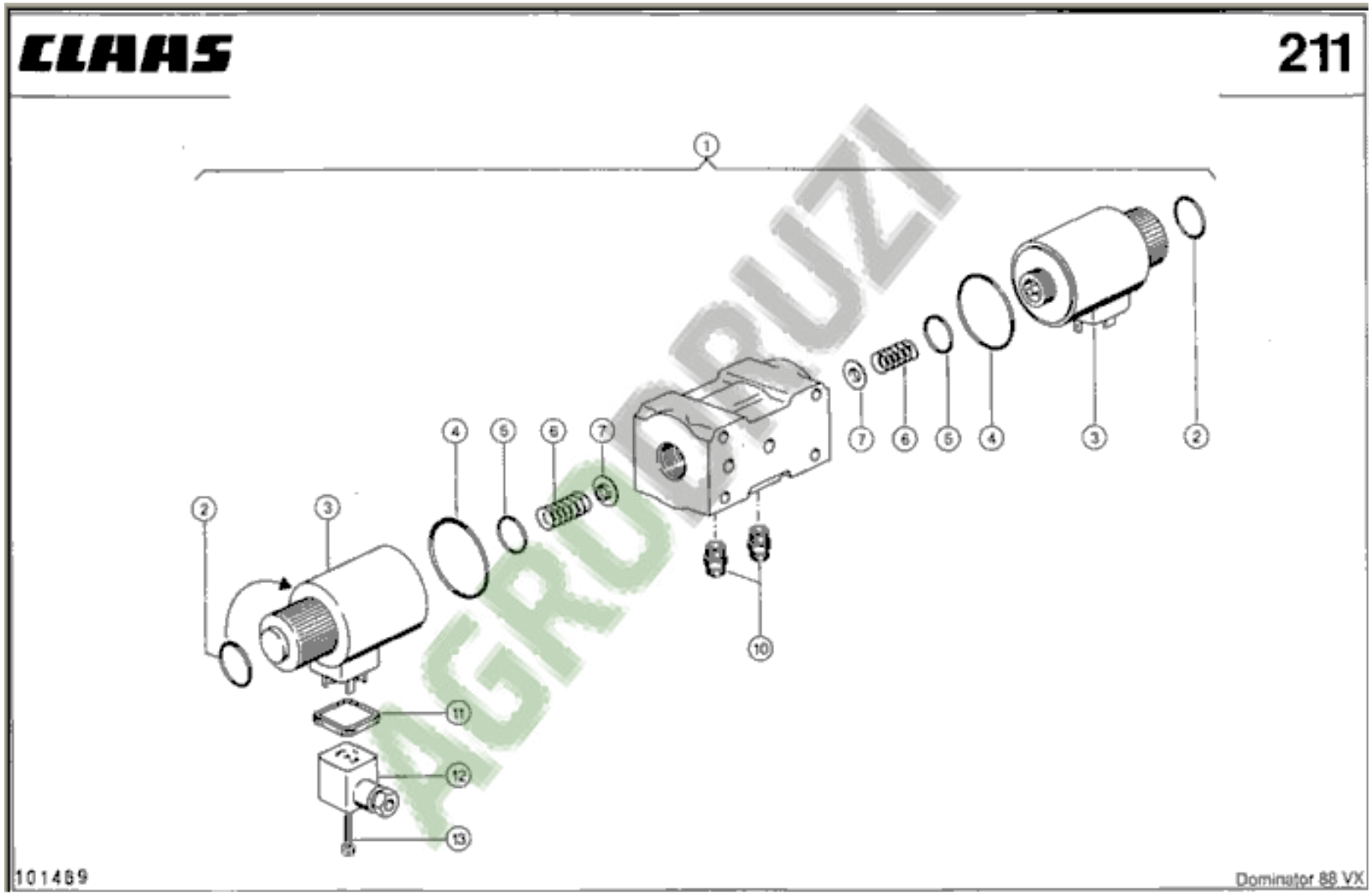


AGRODRUZI

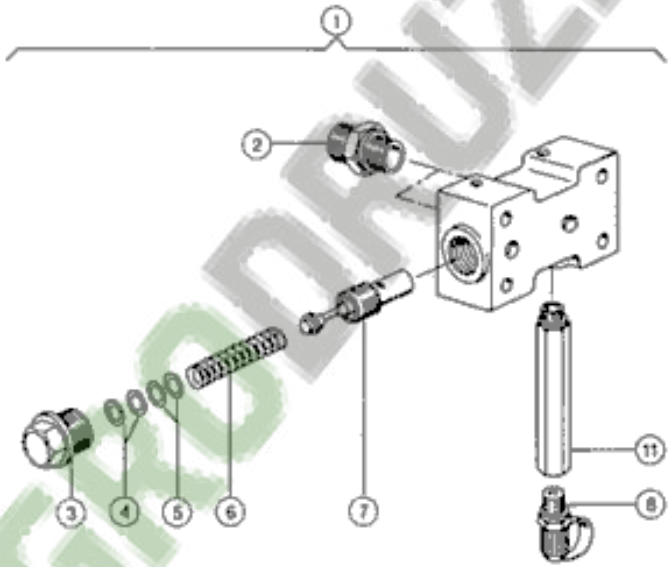


AGRODRUZI

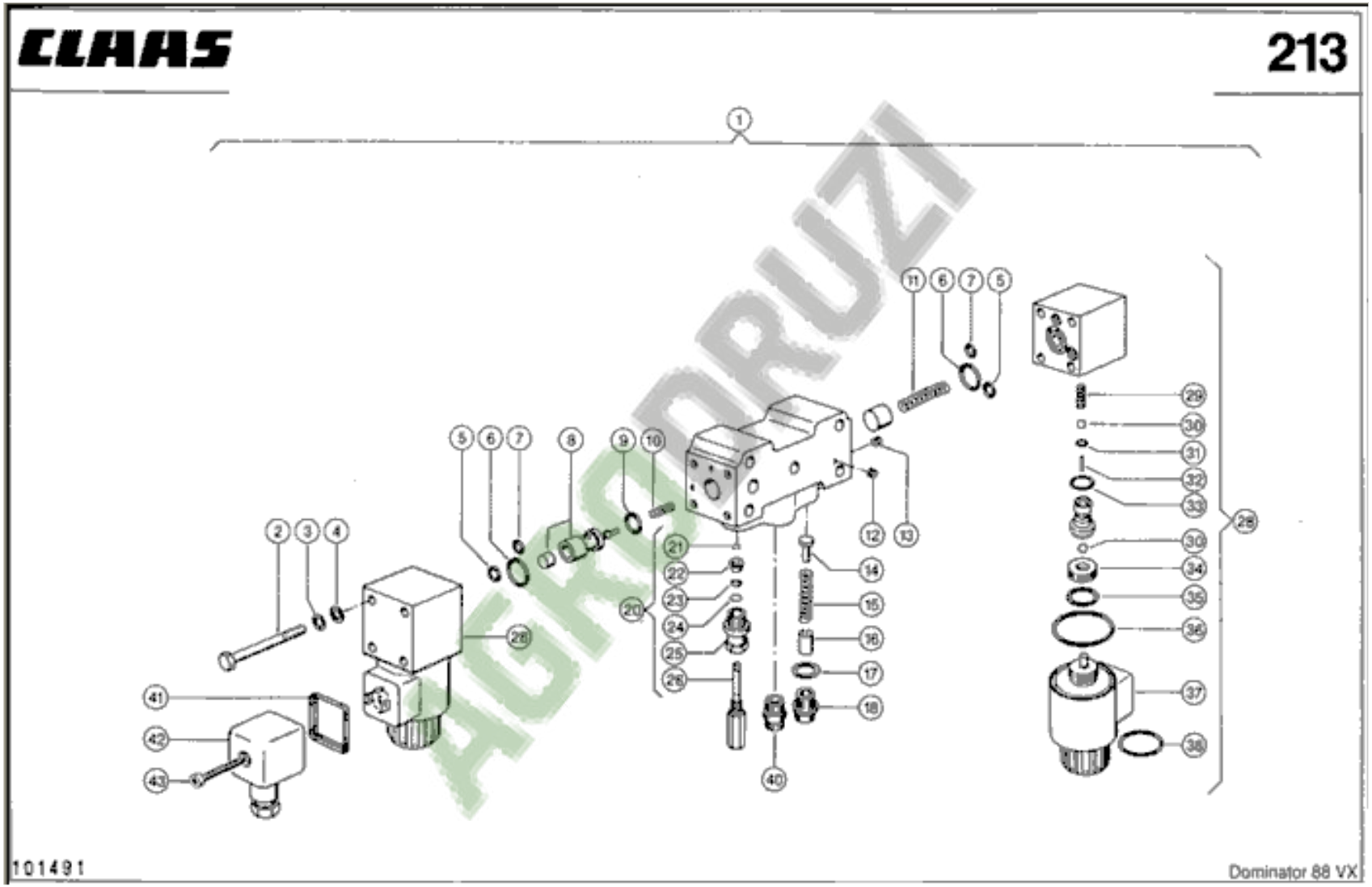
1
2
3
4
5
6
7
8
9
10
11
12
13
14
15
16
17
18
20
21
22
23
24
25
26
28
29
30
31
32
33
34
35
36
37
38
40
41
42
43
101491
Dominator 88 VX

AGRODRUZI

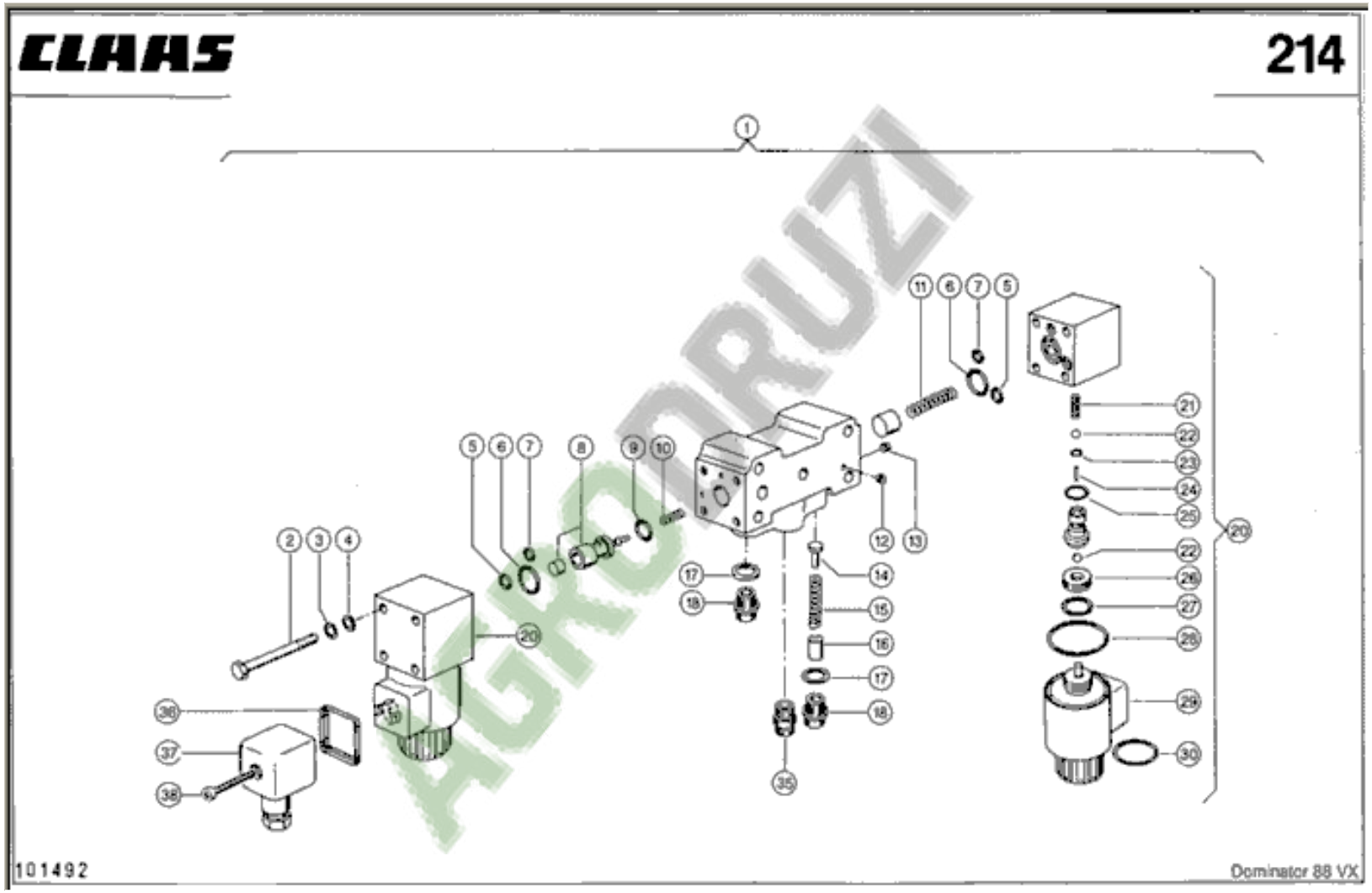
CLAAS
214
101492
Dominator 88 VX

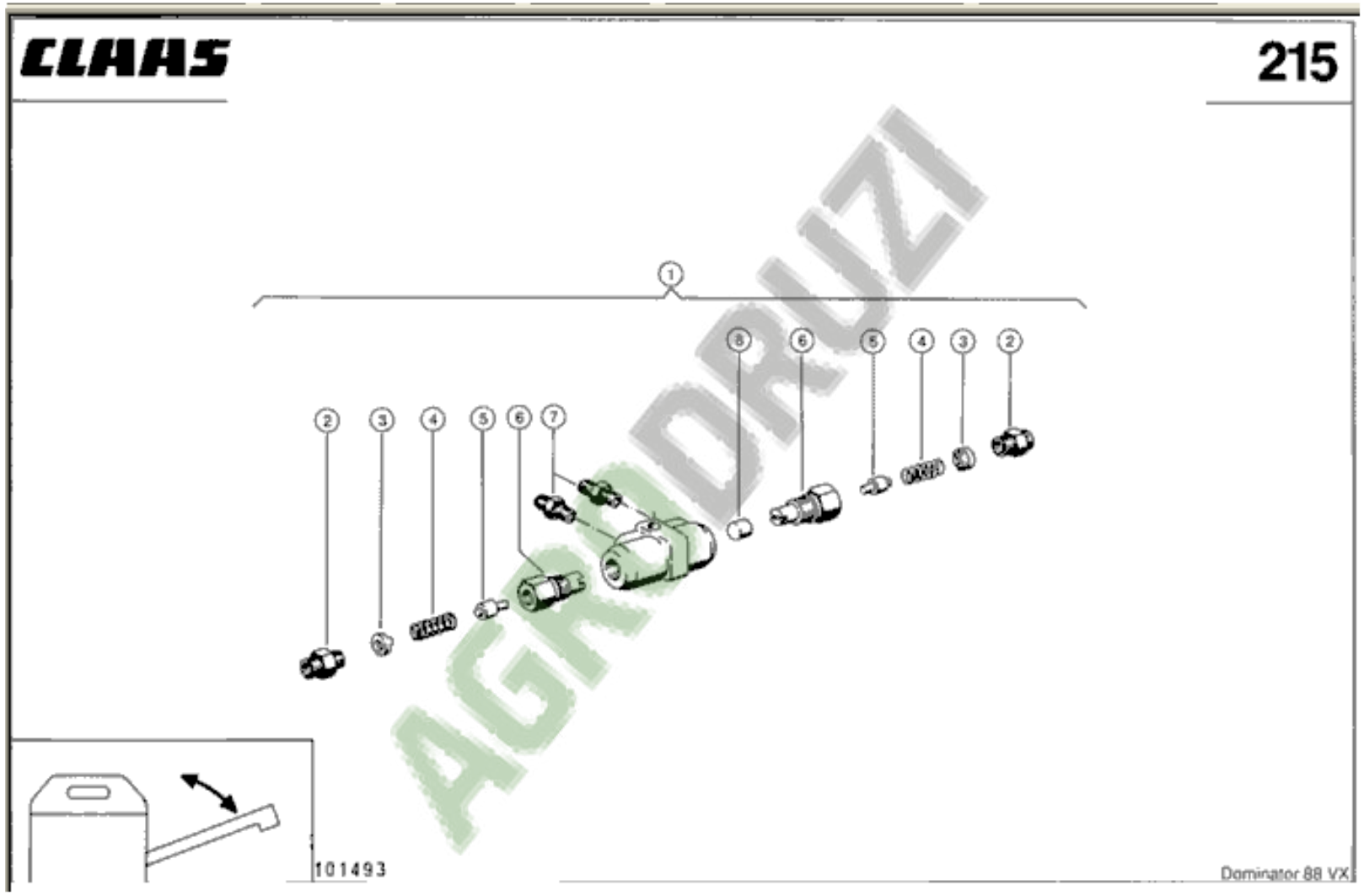


AGRODRUZI

CLAAS

"CLAAS AUTO - CONTOUR"

216

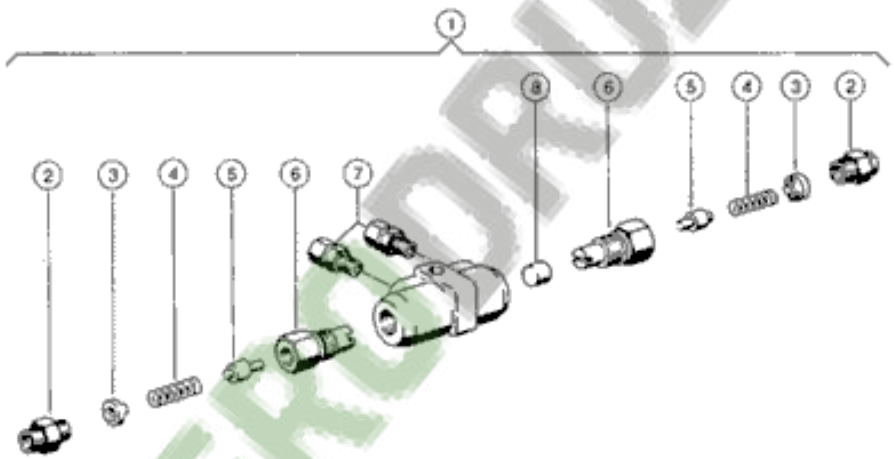


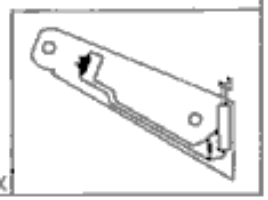

101494

Dominator 88 VX

AGRODRUZI

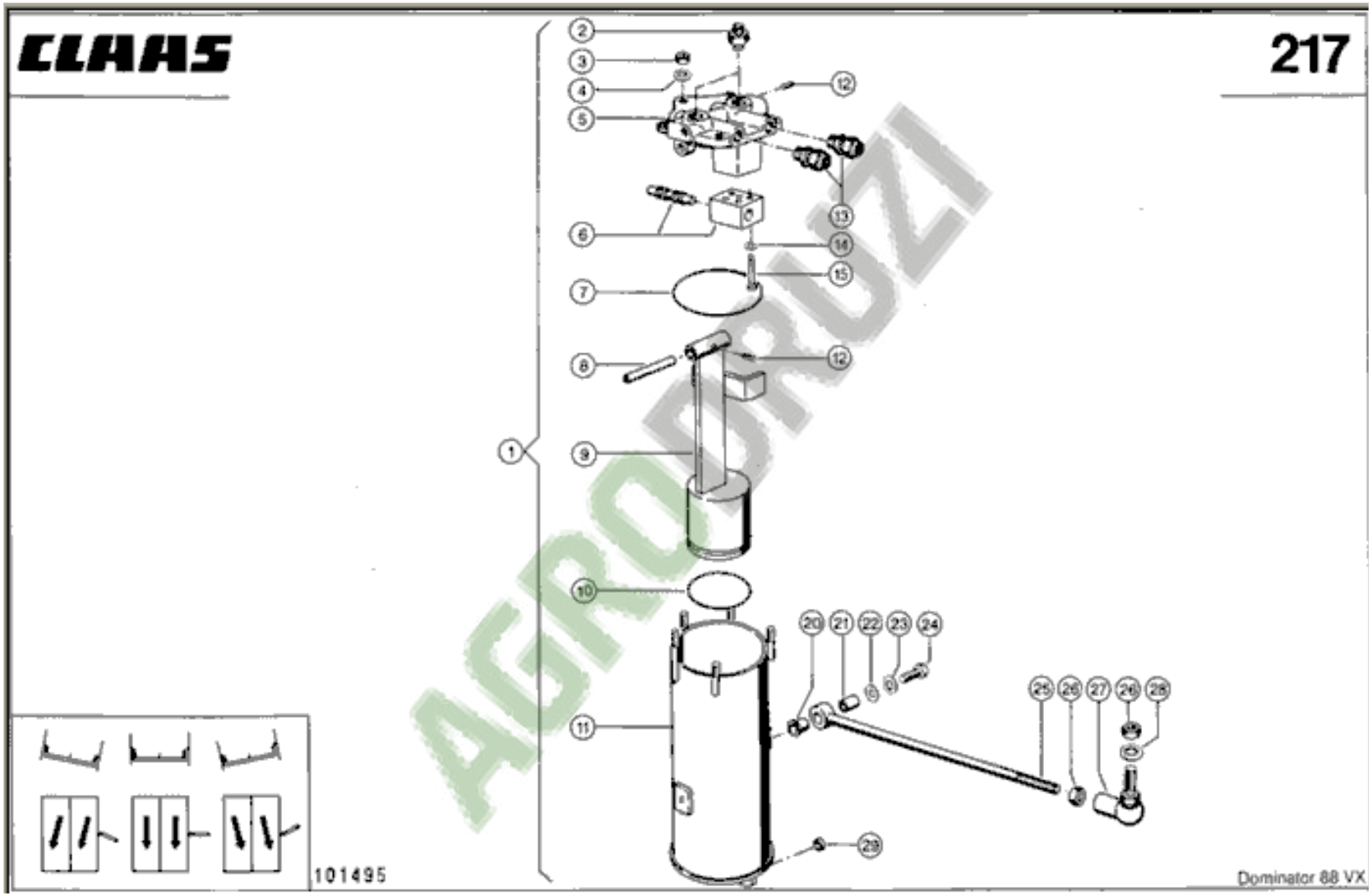


AGRODRUZI

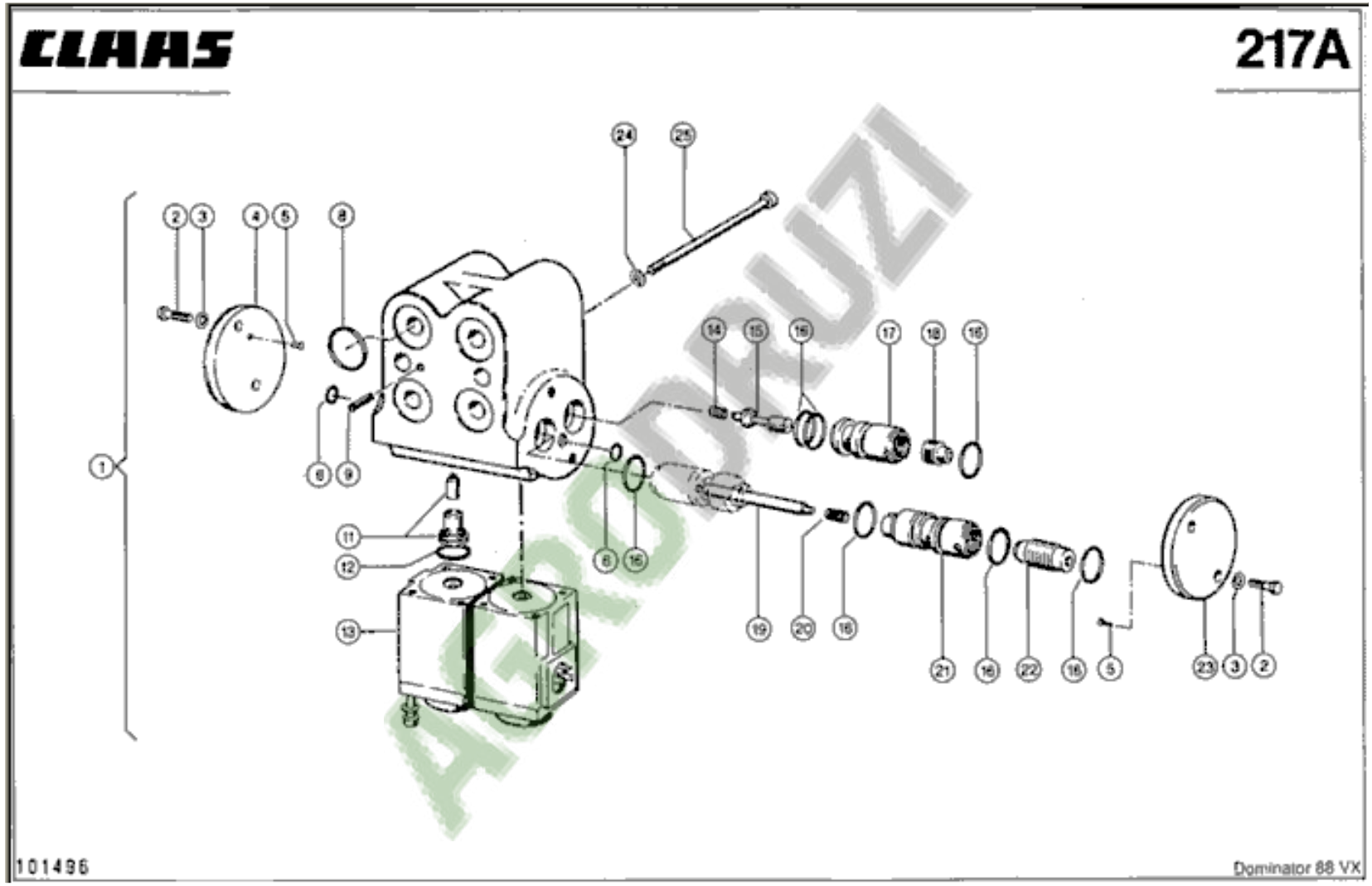
CLAAS
217A
101496
Dominator 88 VX

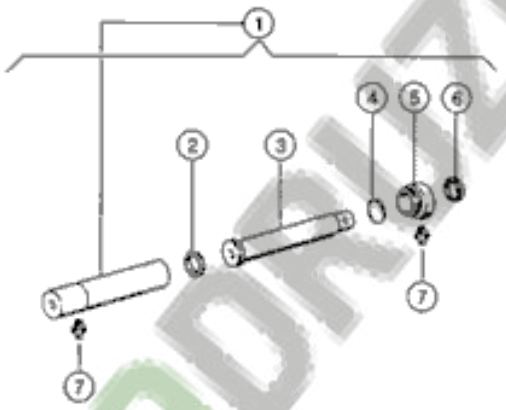


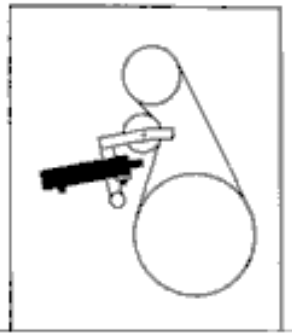

AGRODRUZI

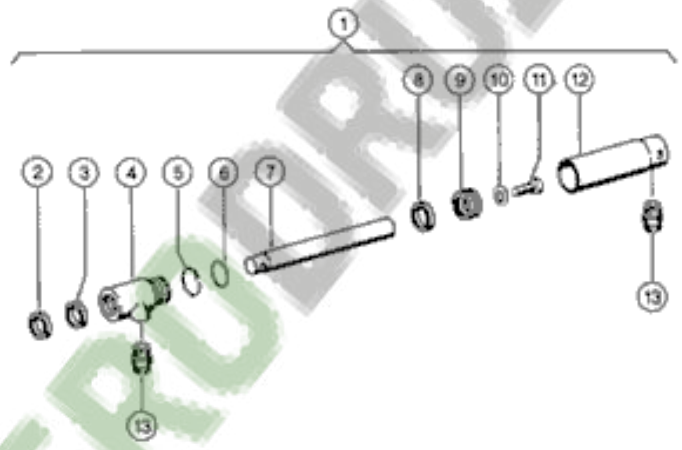


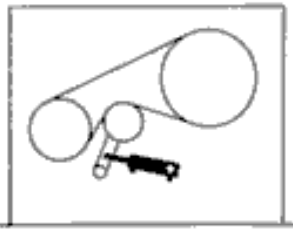

AGRODRUZI

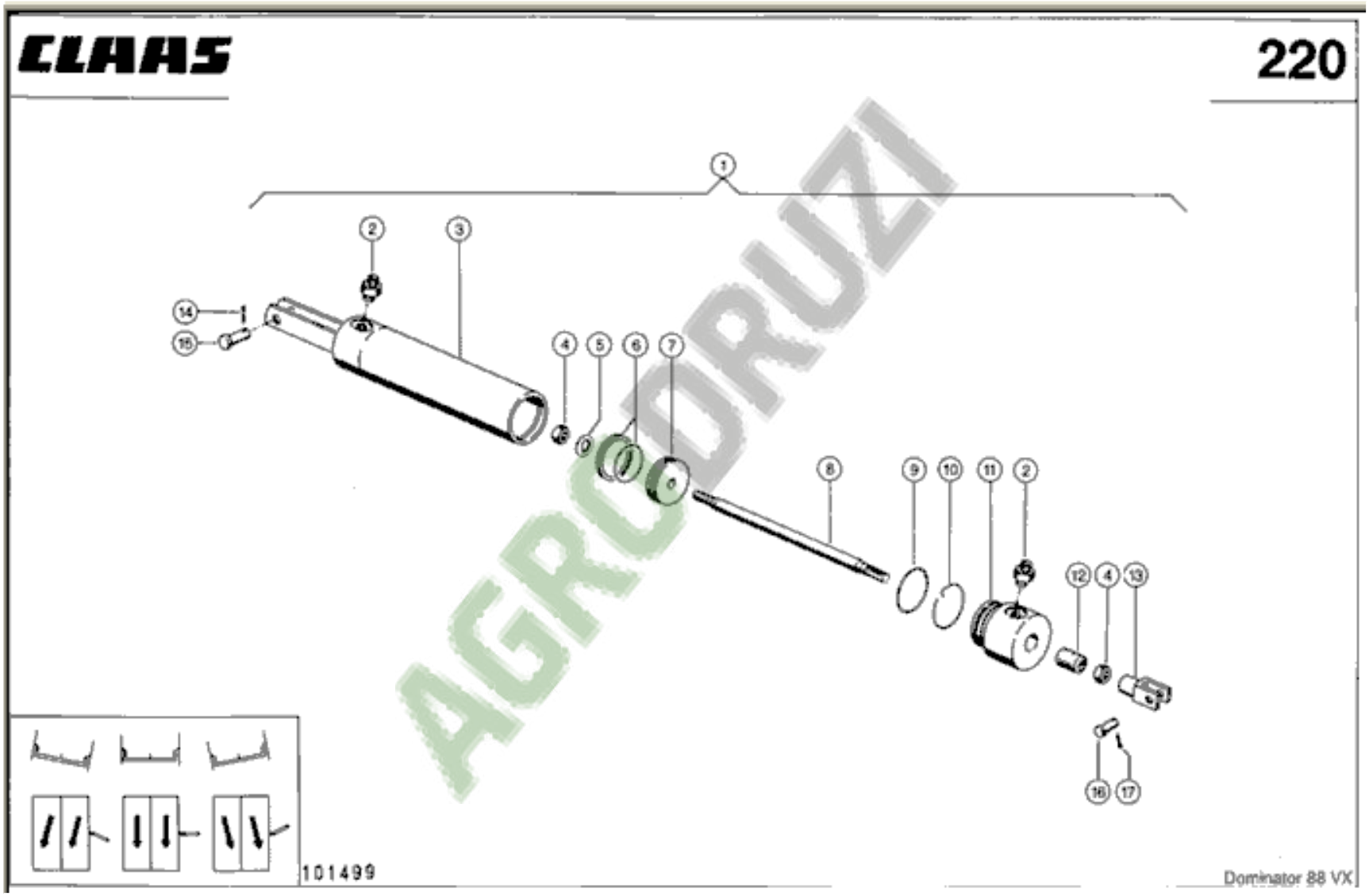
CLAAS
220
1
2
3
4
5
6
7
8
9
10
11
2
12
4
13
14
15
16
17
101499
Dominator 88 VX

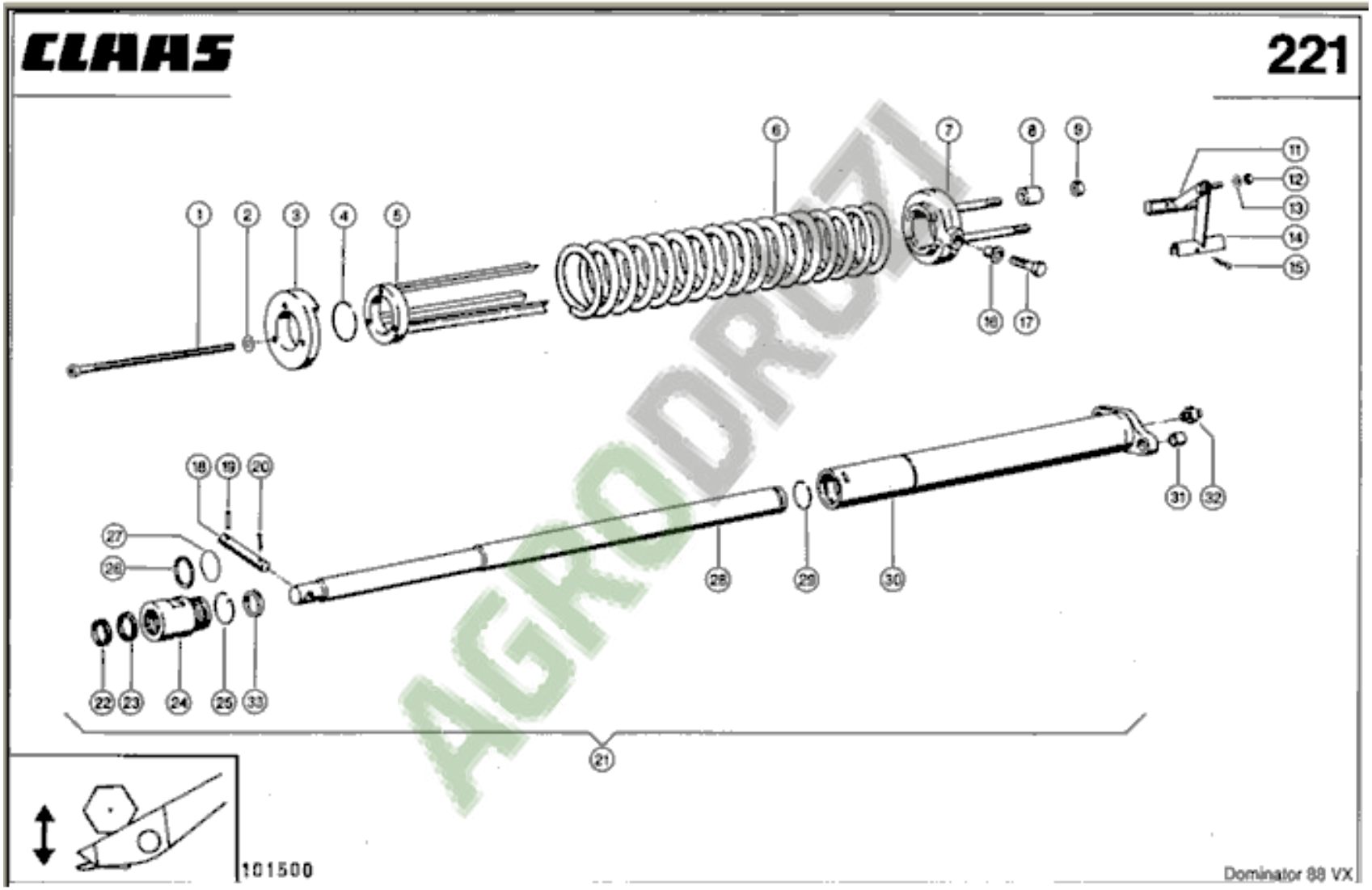


AGRODRUZI

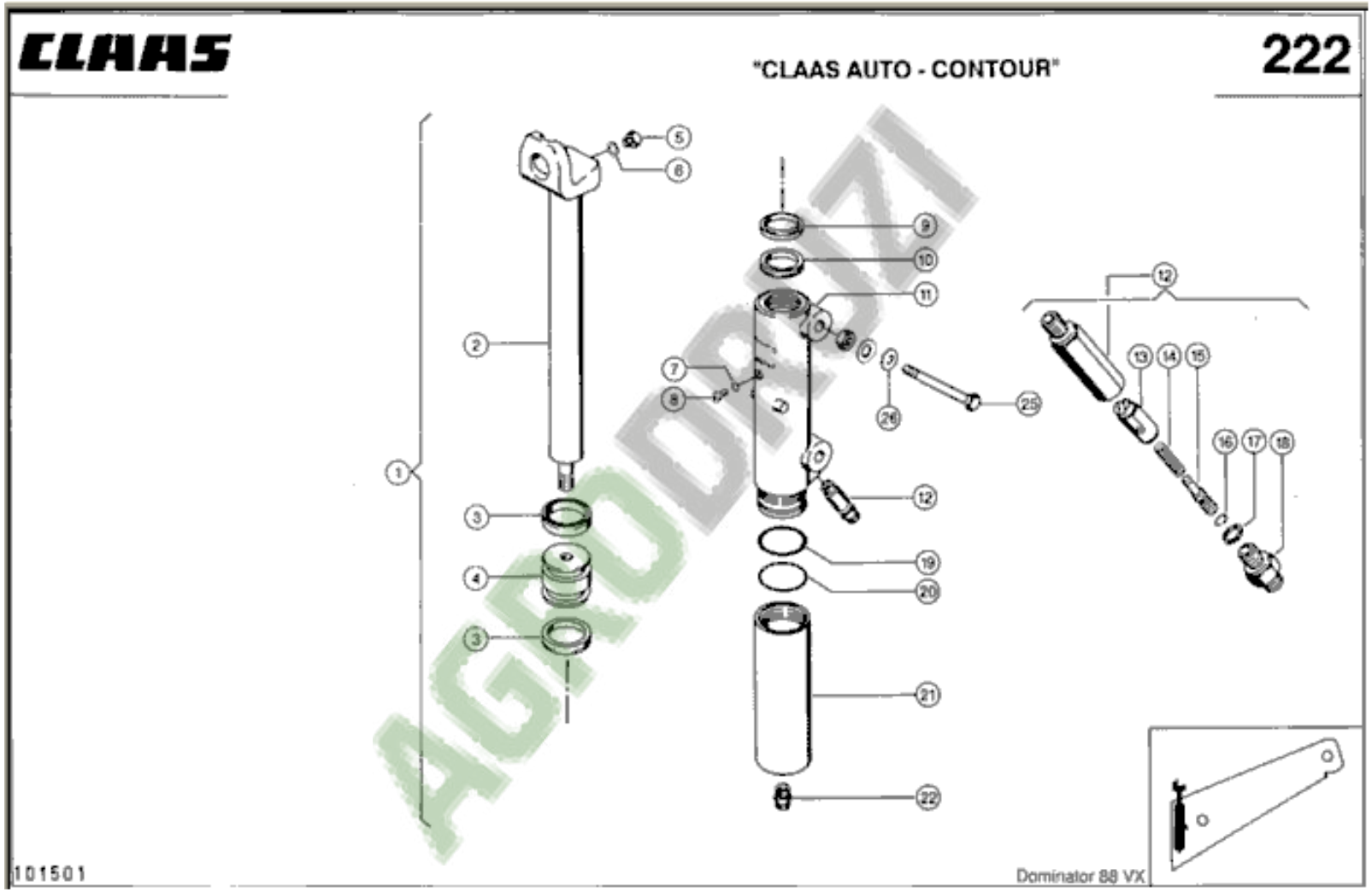
CLAAS
"CLAAS AUTO - CONTOUR"
222
101501
Dominator 88 VX

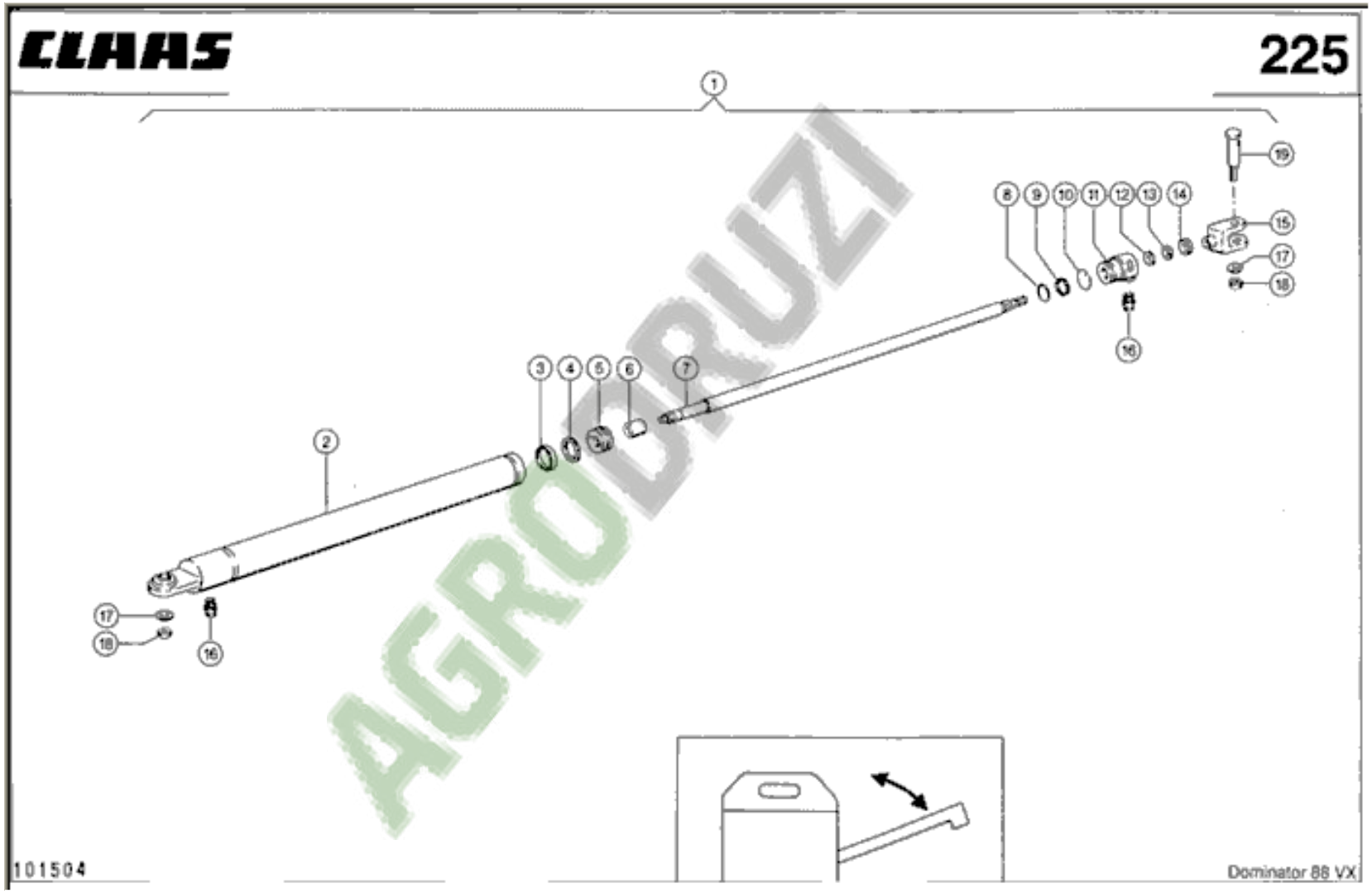
CLAAS
225
1
2
3
4
5
6
7
8
9
10
11
12
13
14
15
16
17
18
19
101504
Dominator 88 VX

AGRODRUZI

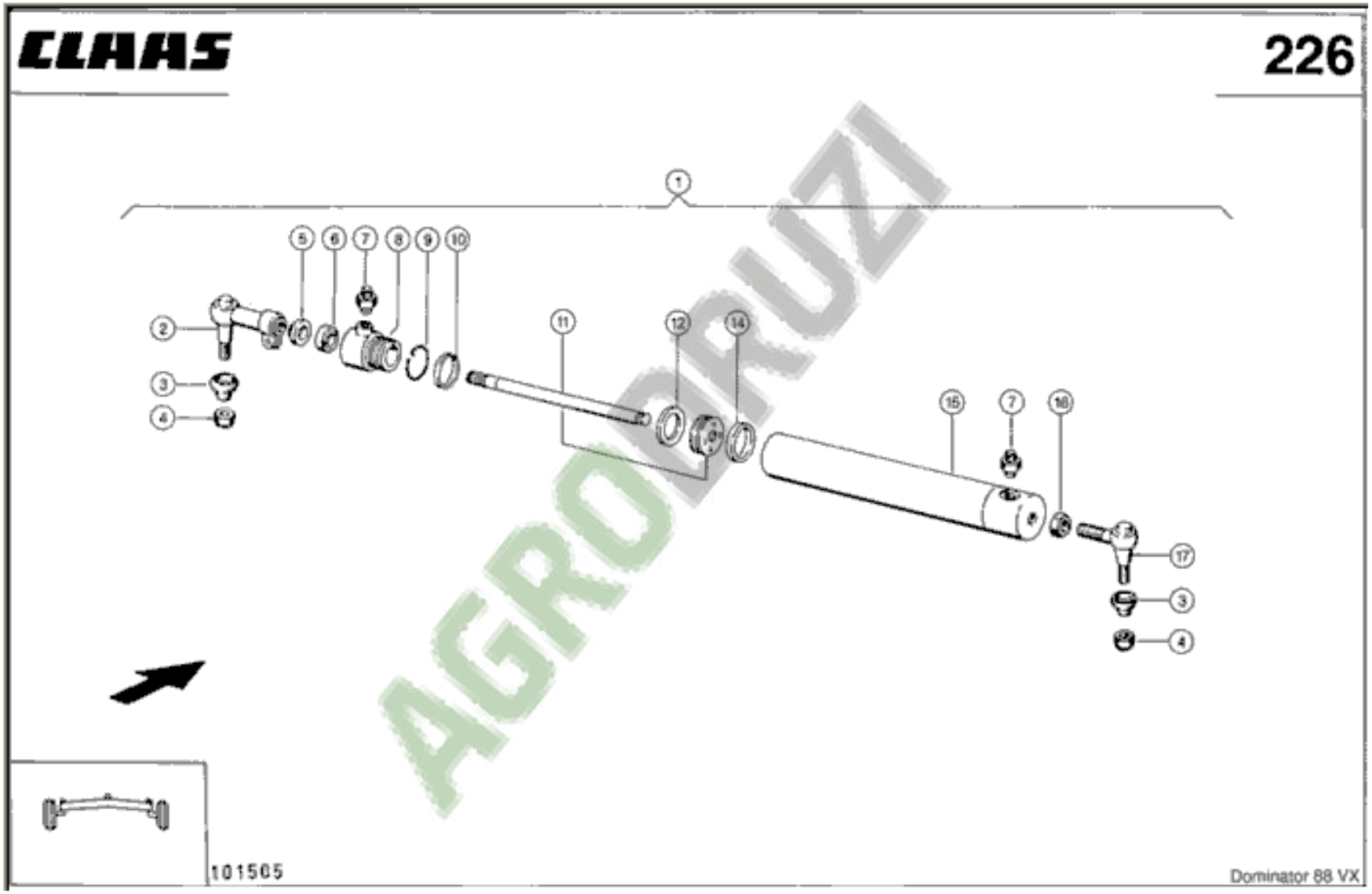
CLAAS
226
1
2
3
4
5
6
7
8
9
10
11
12
14
15
7
16
17
3
4
101505
Dominator 88 VX

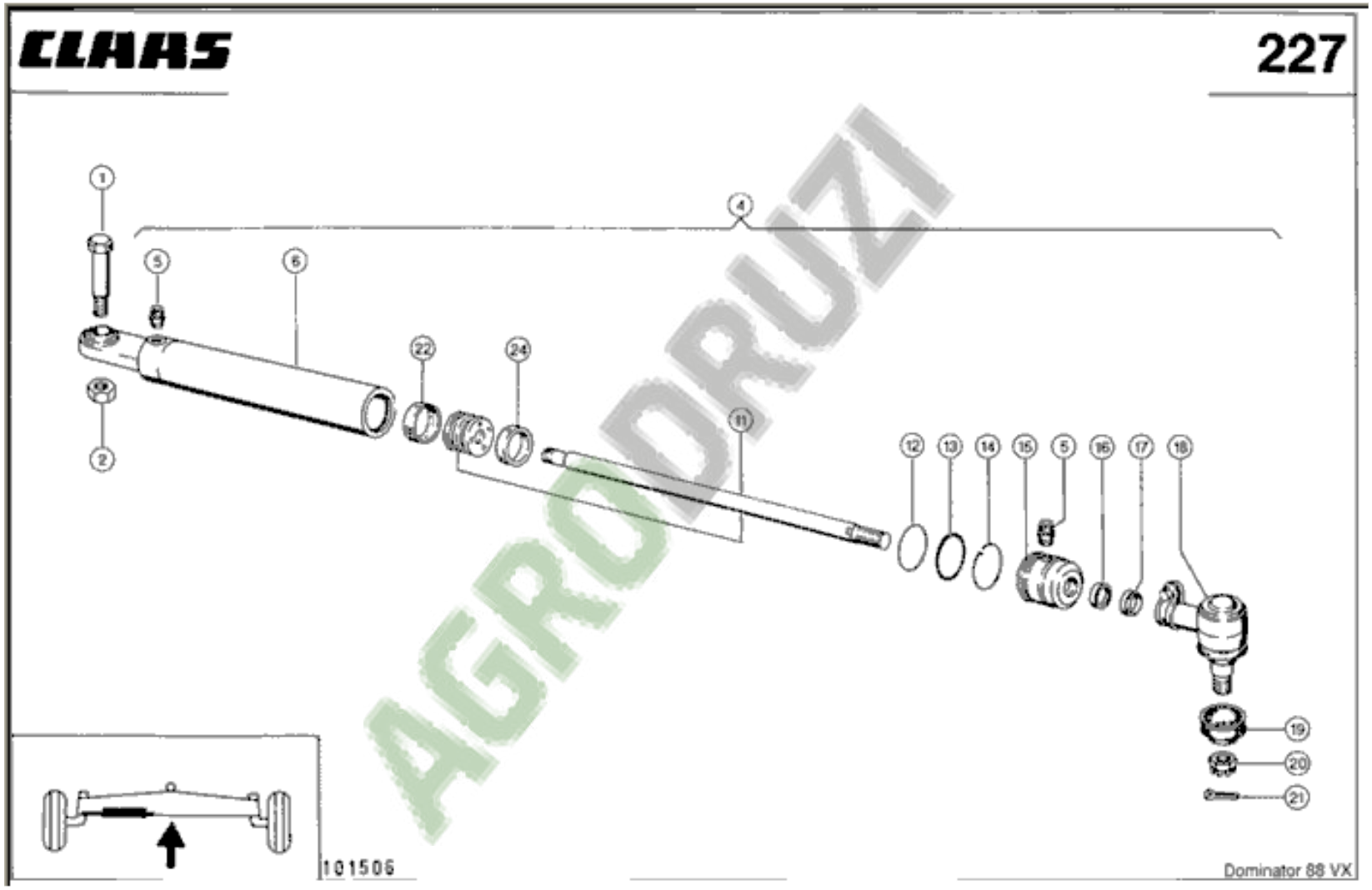
CLAAS
227
1
2
4
5
6
22
24
11
12
13
14
15
5
16
17
18
19
20
21
101506
Dominator 88 VX

AGRODRUZI

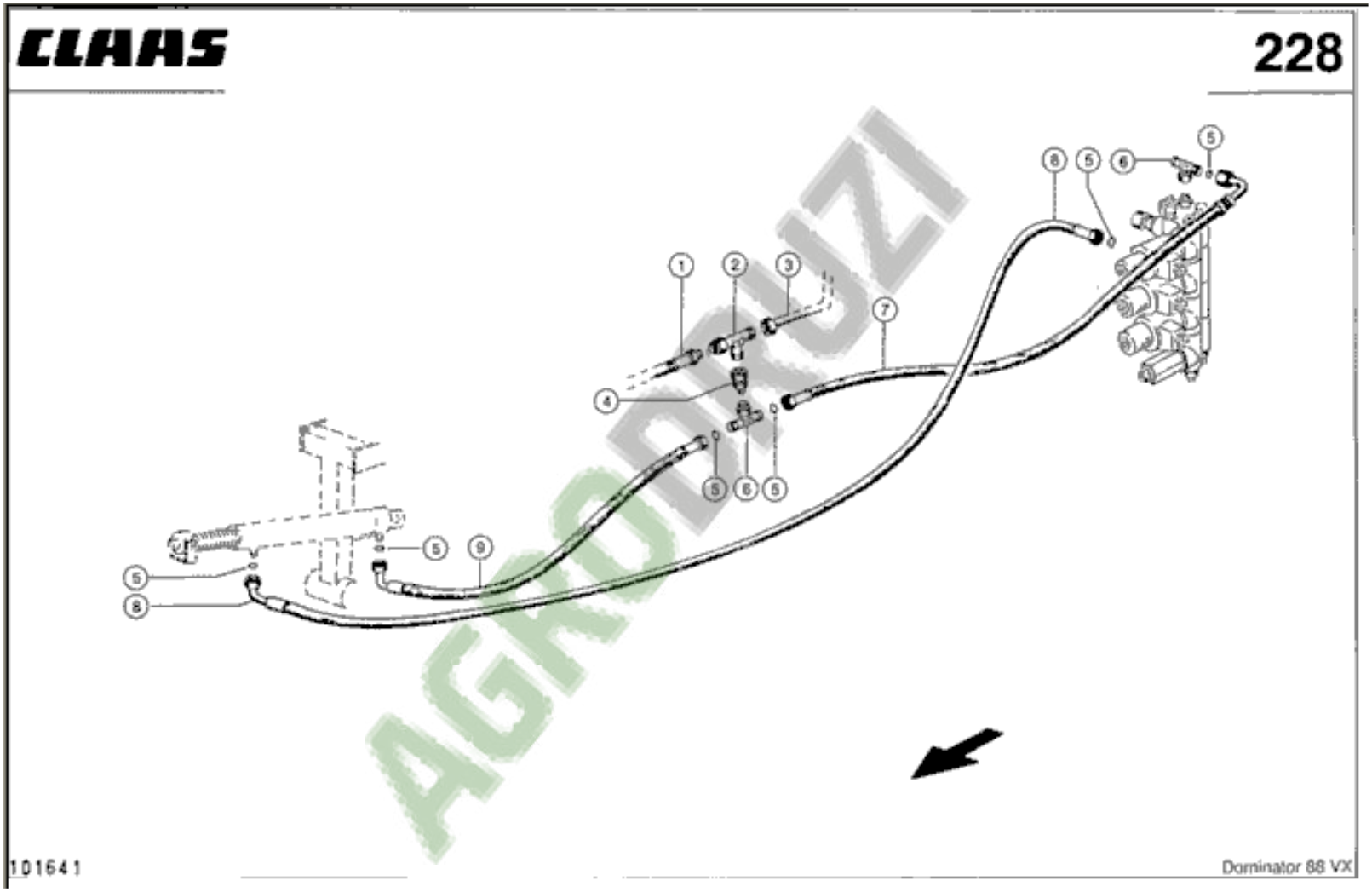


AGRODRUZI

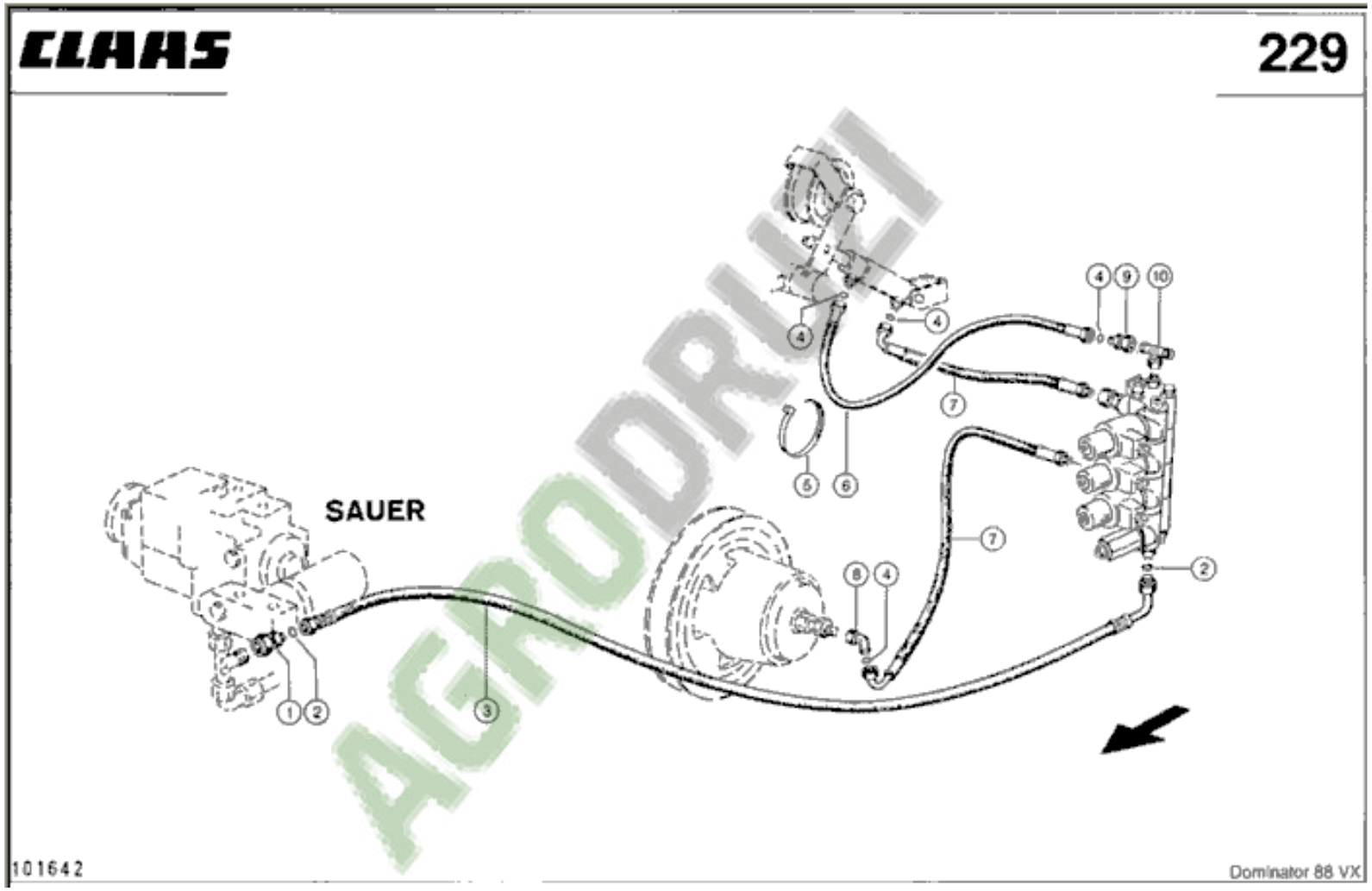
CLAAS
229
SAUER
1
2
3
4
5
6
7
8
9
10
101642
Dominator 88 VX

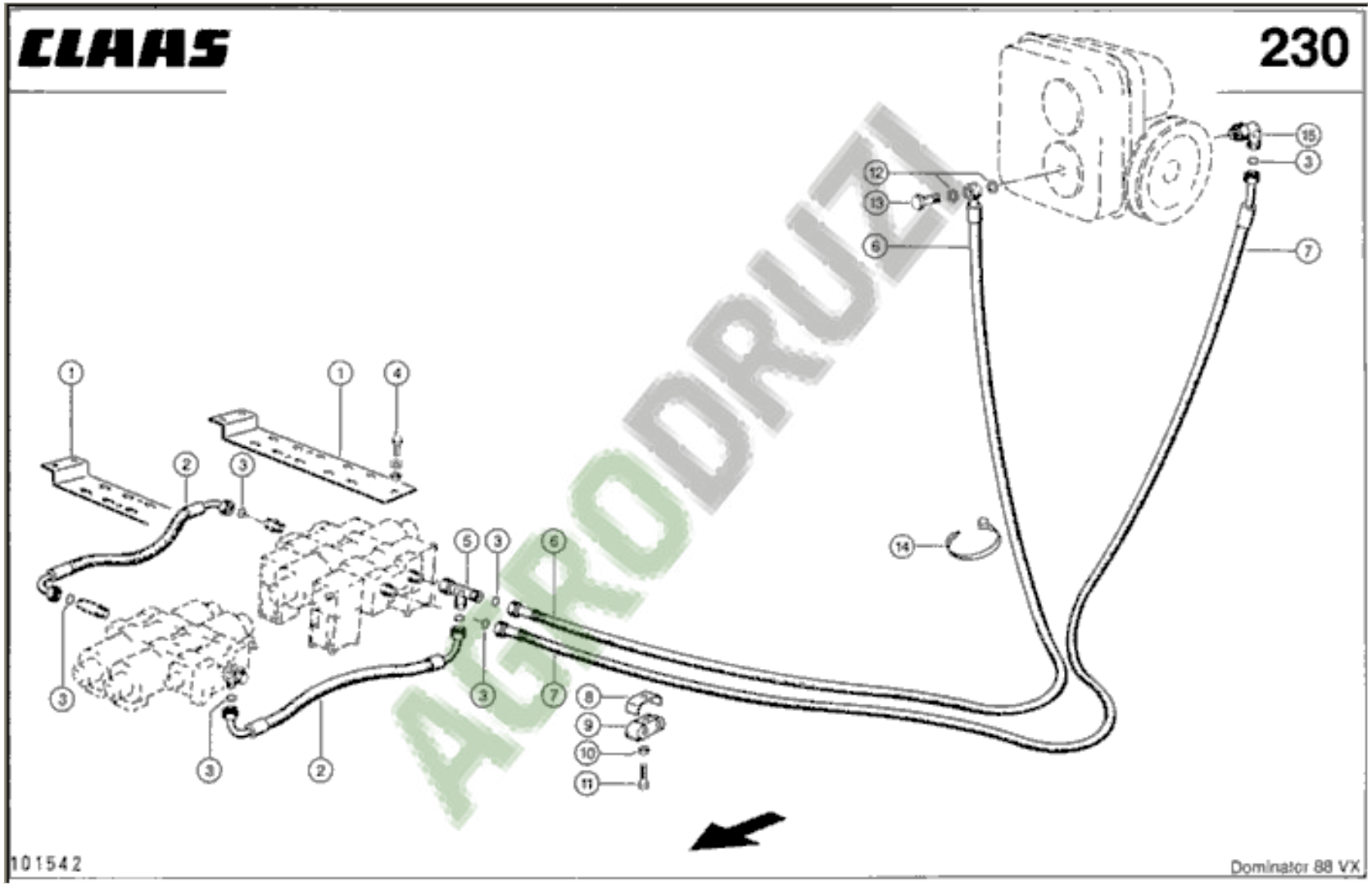
CLAAS
230
101542
Dominator 88 VX

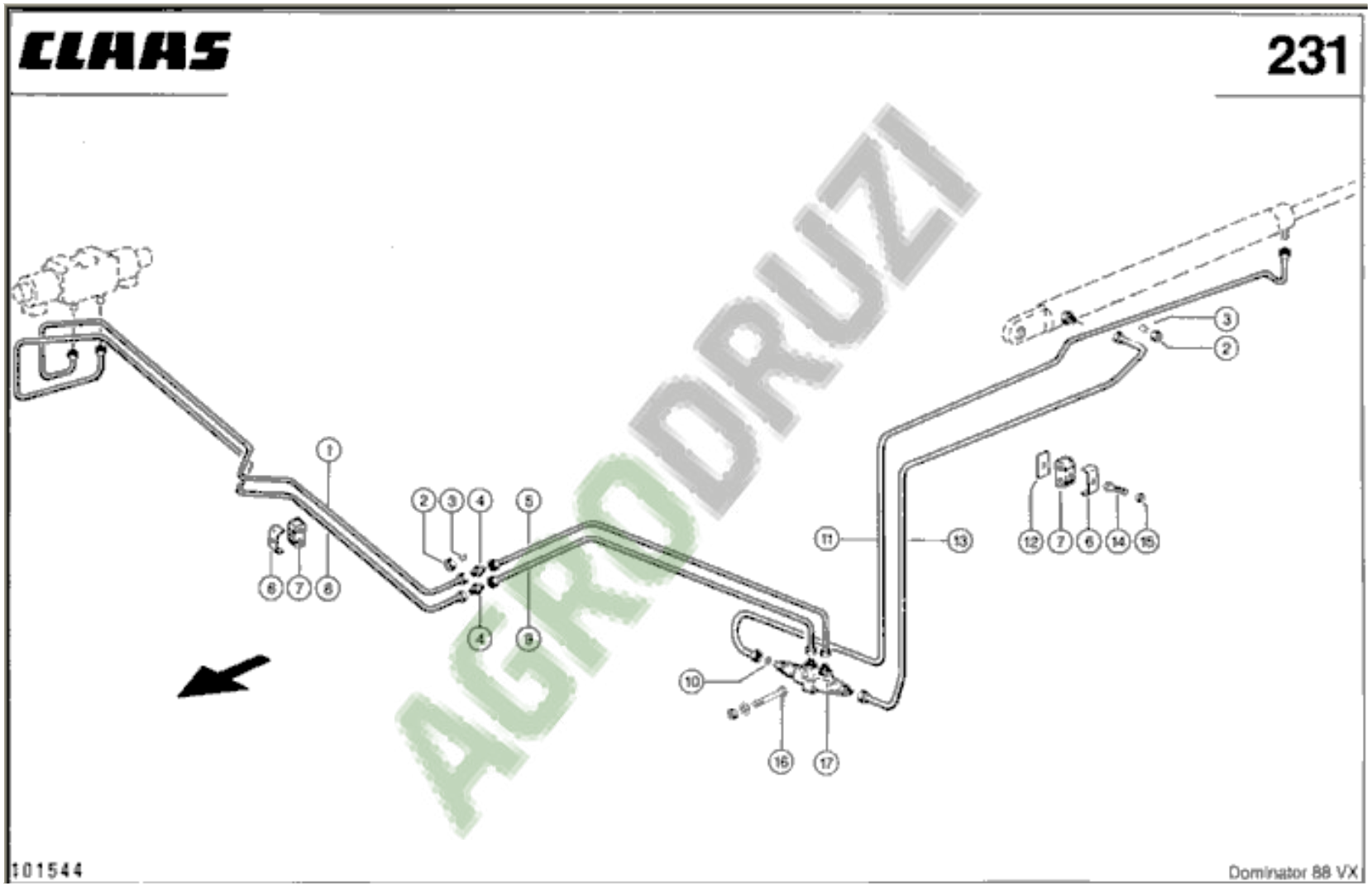


AGRODRUZI

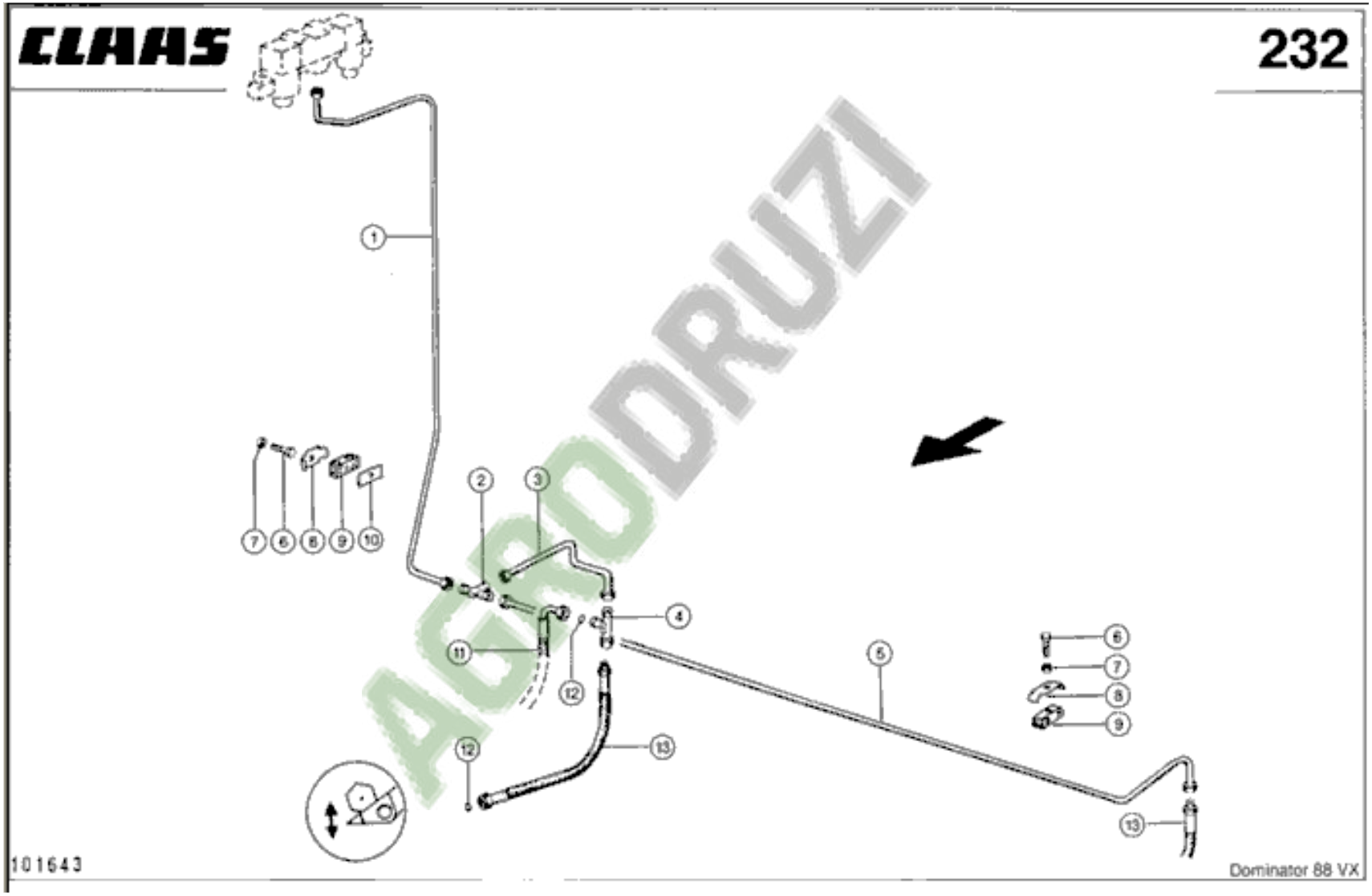


AGRODRUZI

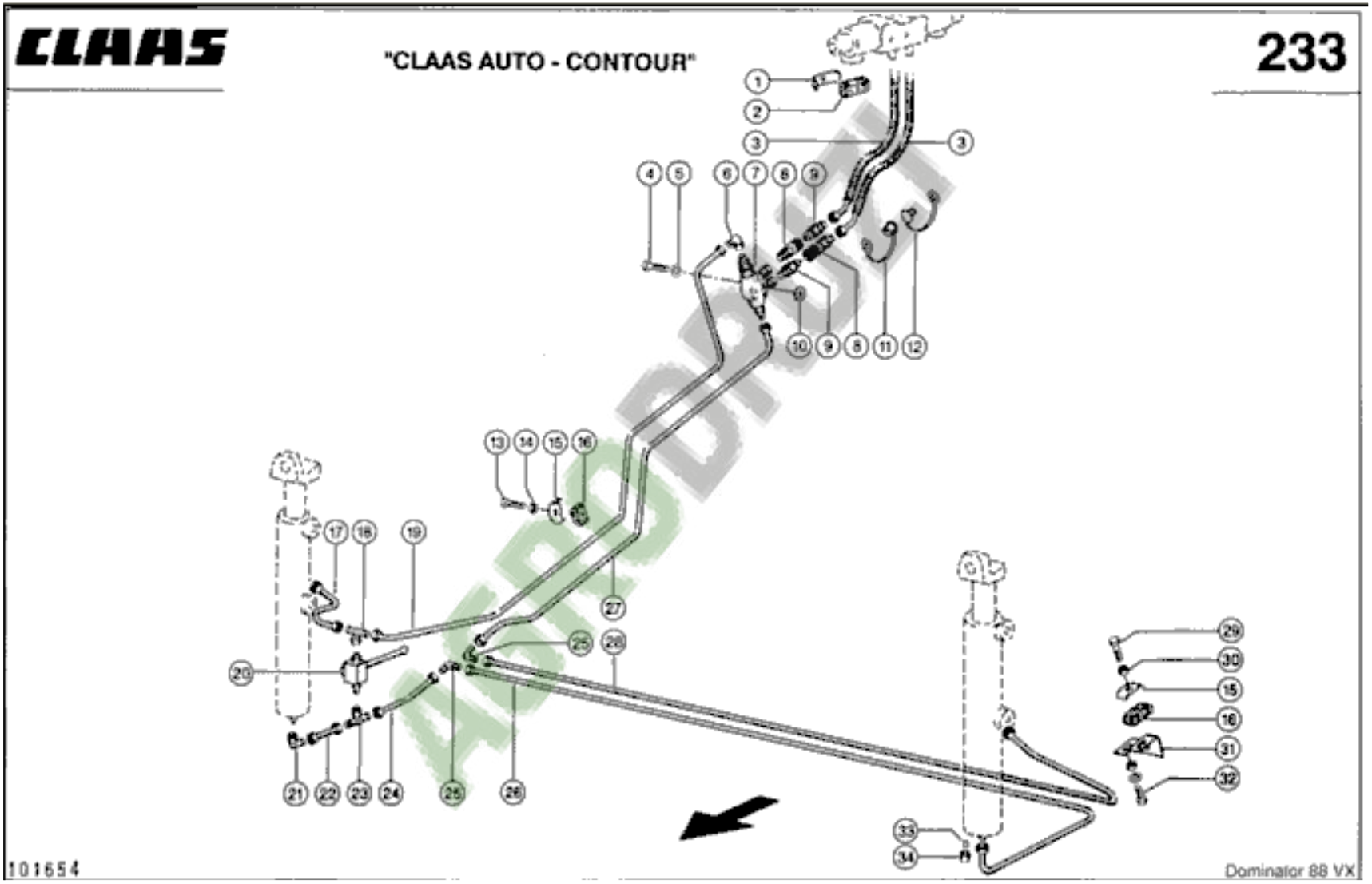
CLAAS
"CLAAS AUTO - CONTOUR"
233
101654
Dominator 88 VX

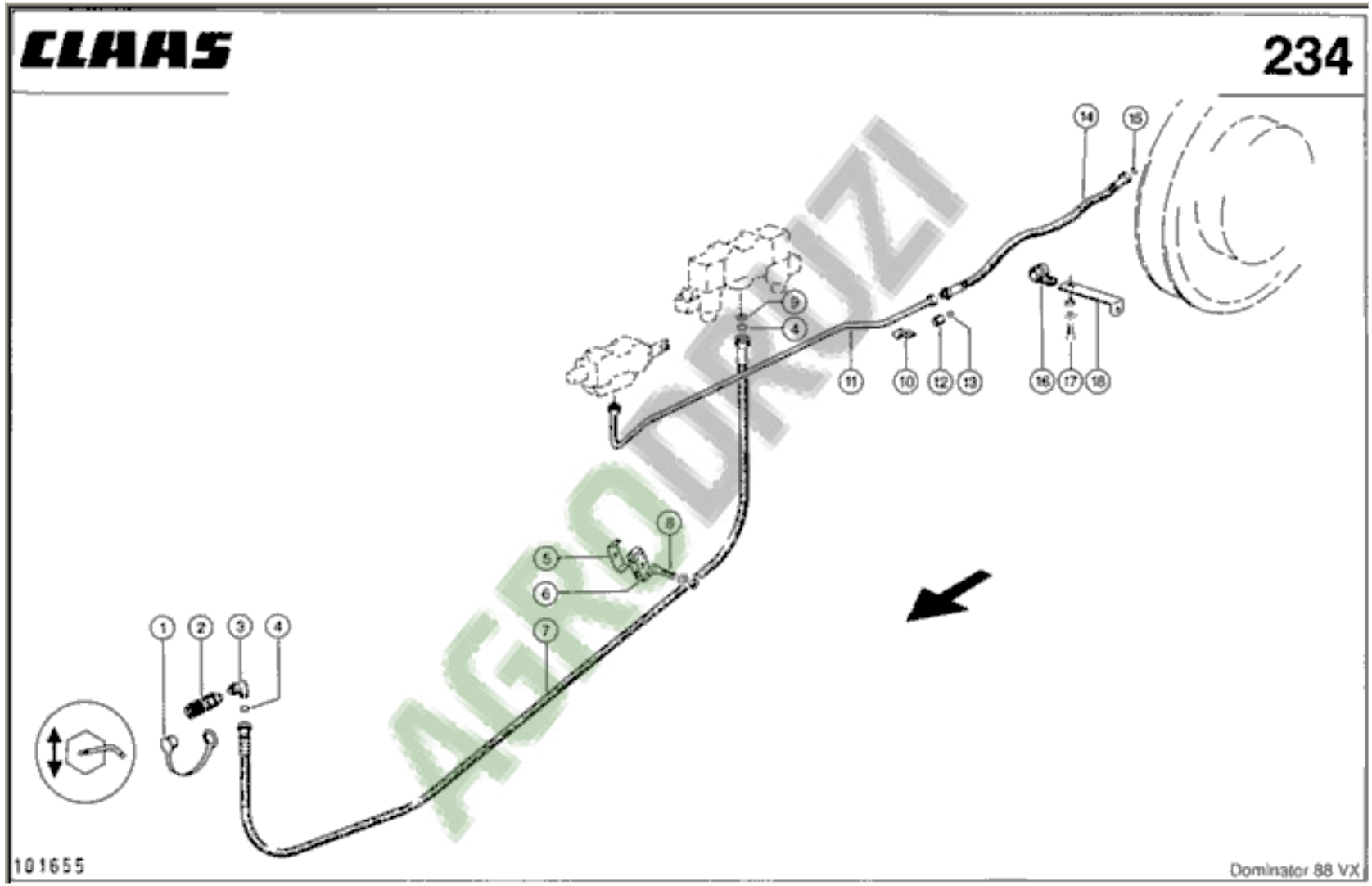
CLAAS
234
1
2
3
4
5
6
7
8
9
10
11
12
13
14
15
16
17
18
101655
Dominator 88 VX

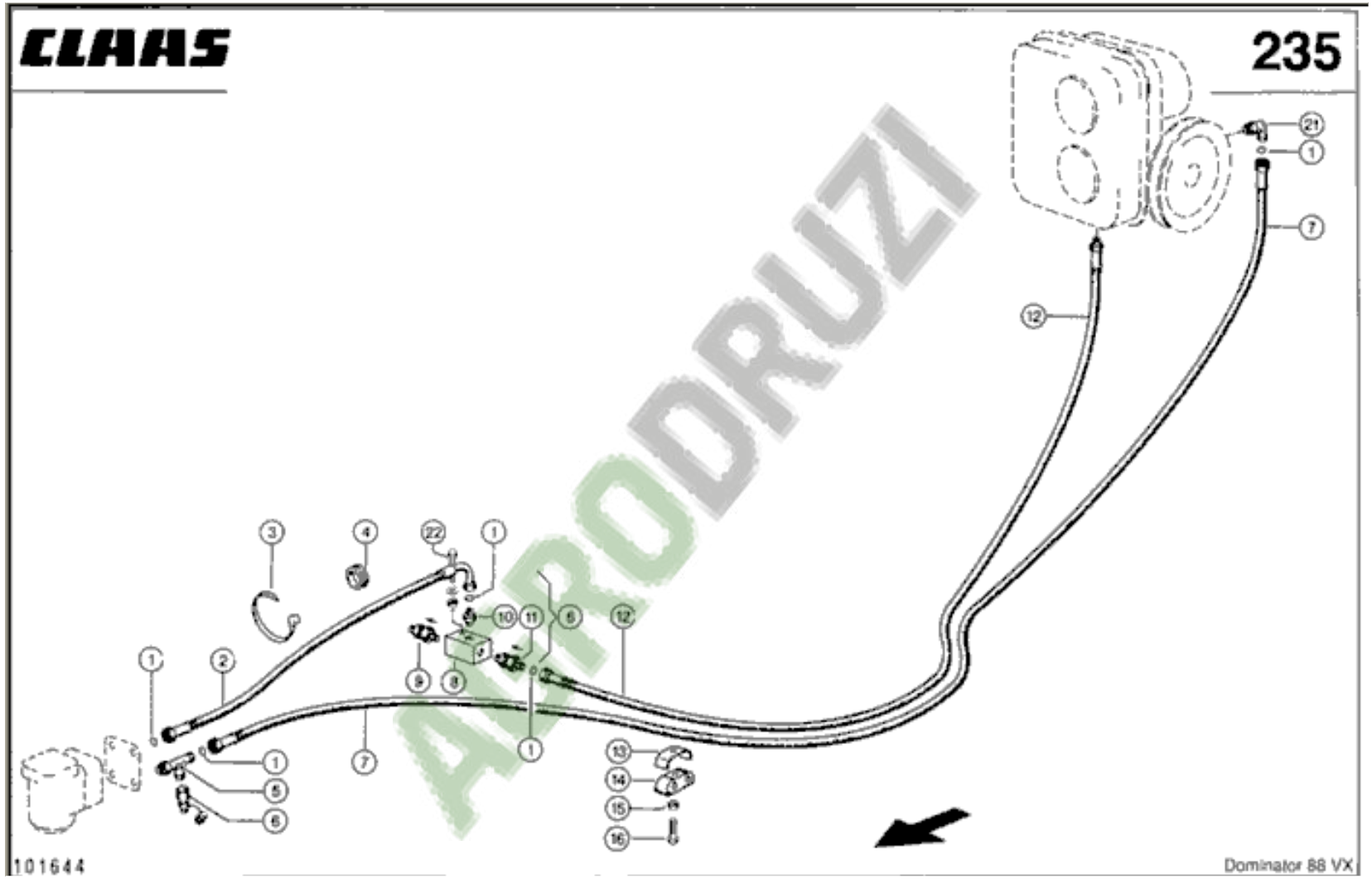


AGRODRUZI

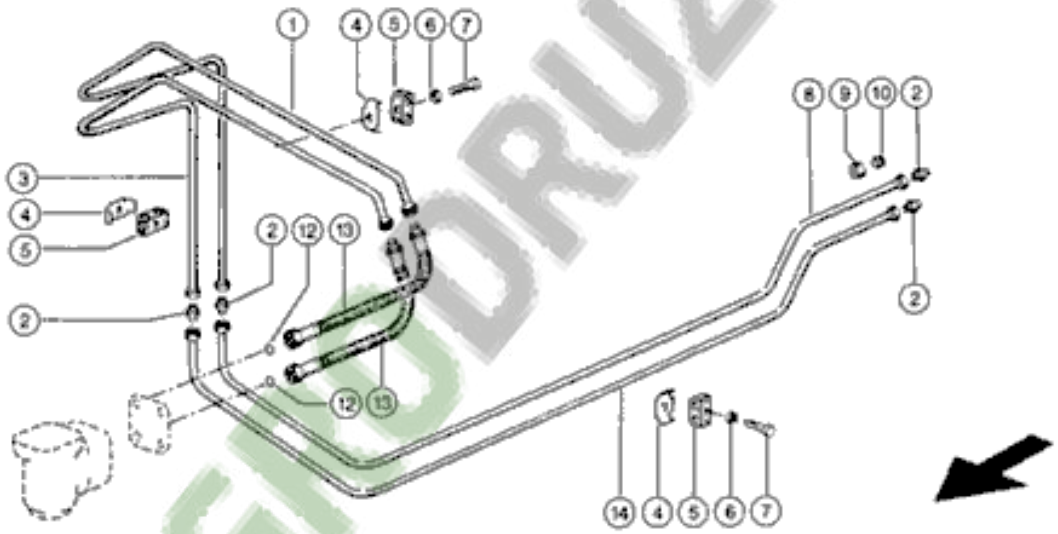


AGRODRUZI

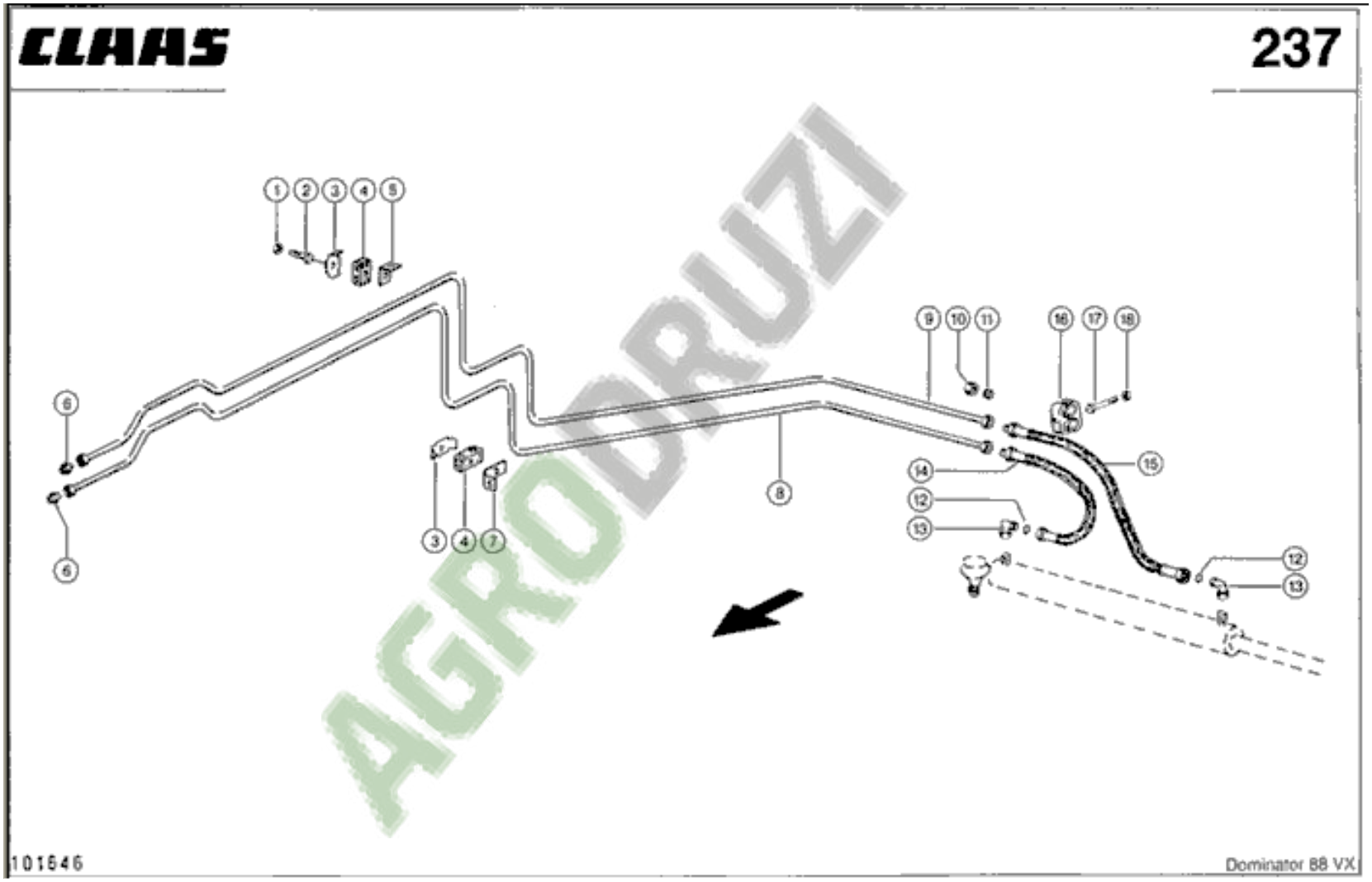
CLAAS
237
1
2
3
4
5
6
6
3
4
7
8
9
10
11
16
17
18
14
12
13
15
12
13
101546
Dominator 88 VX

AGRODRUZI

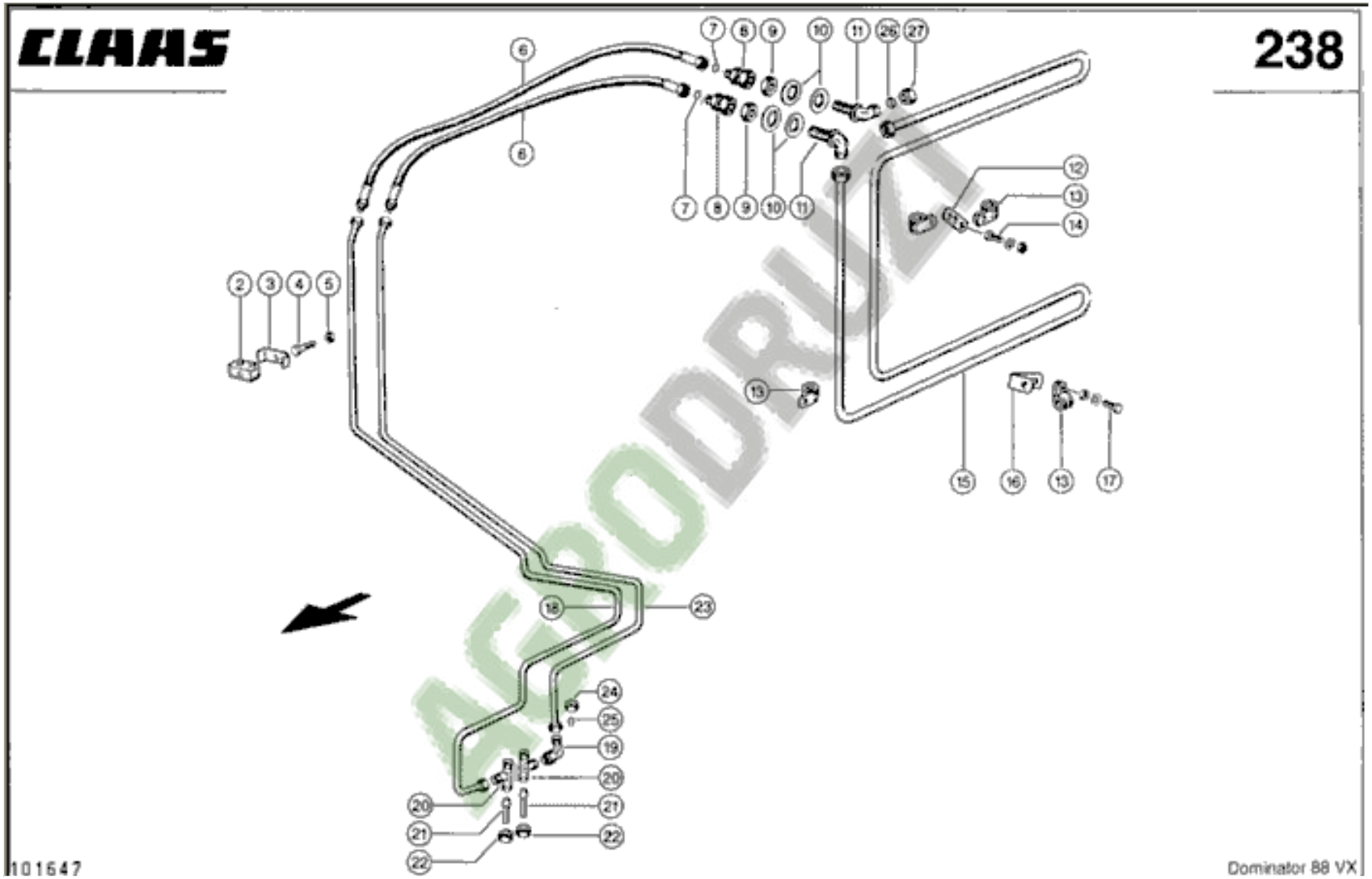
CLAAS
238
101647
Dominator 88 VX

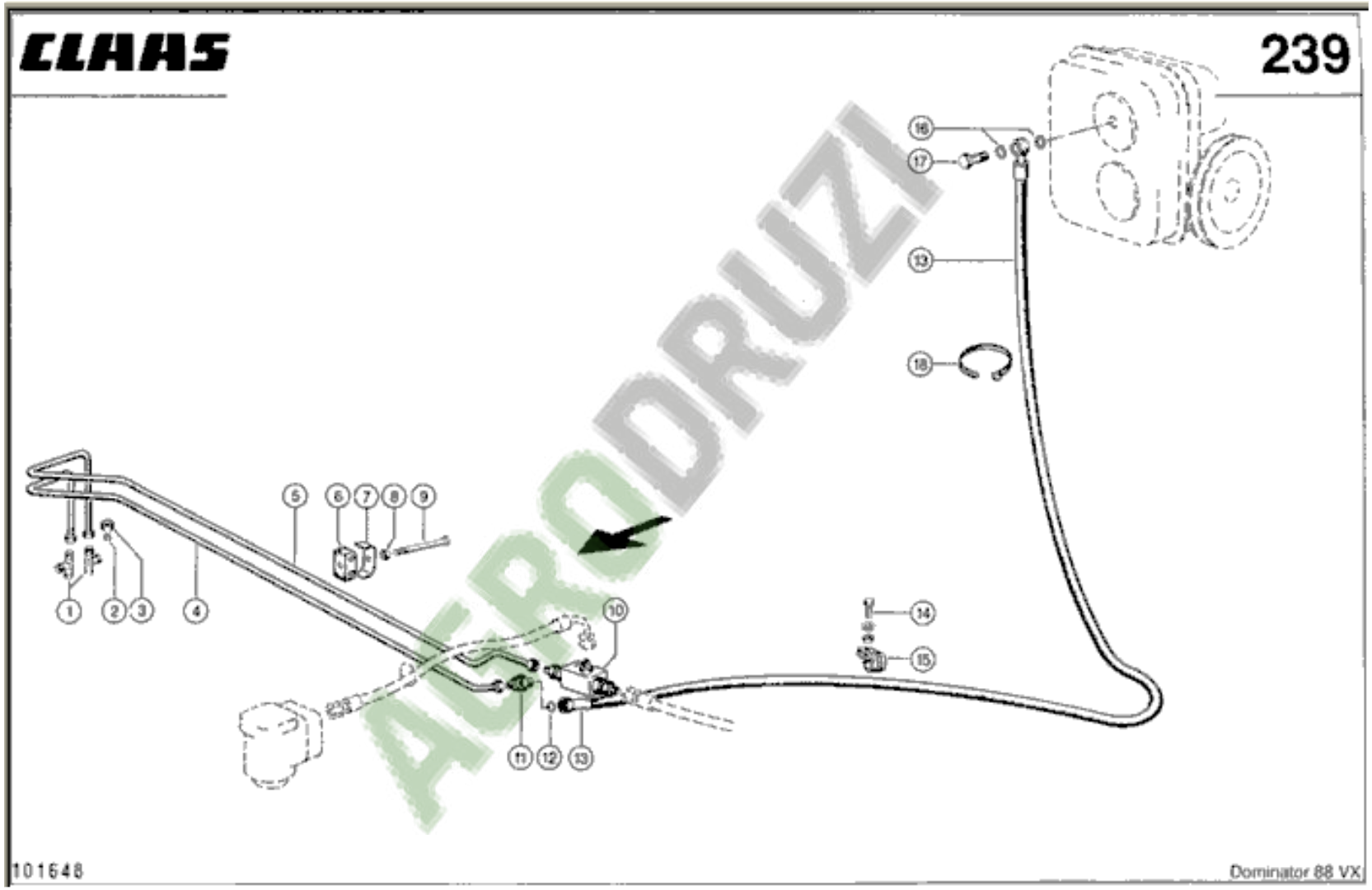
CLAAS
239
1
2
3
4
5
6
7
8
9
10
11
12
13
14
15
16
17
18
101648
Dominator 88 VX

AGRODRUZI

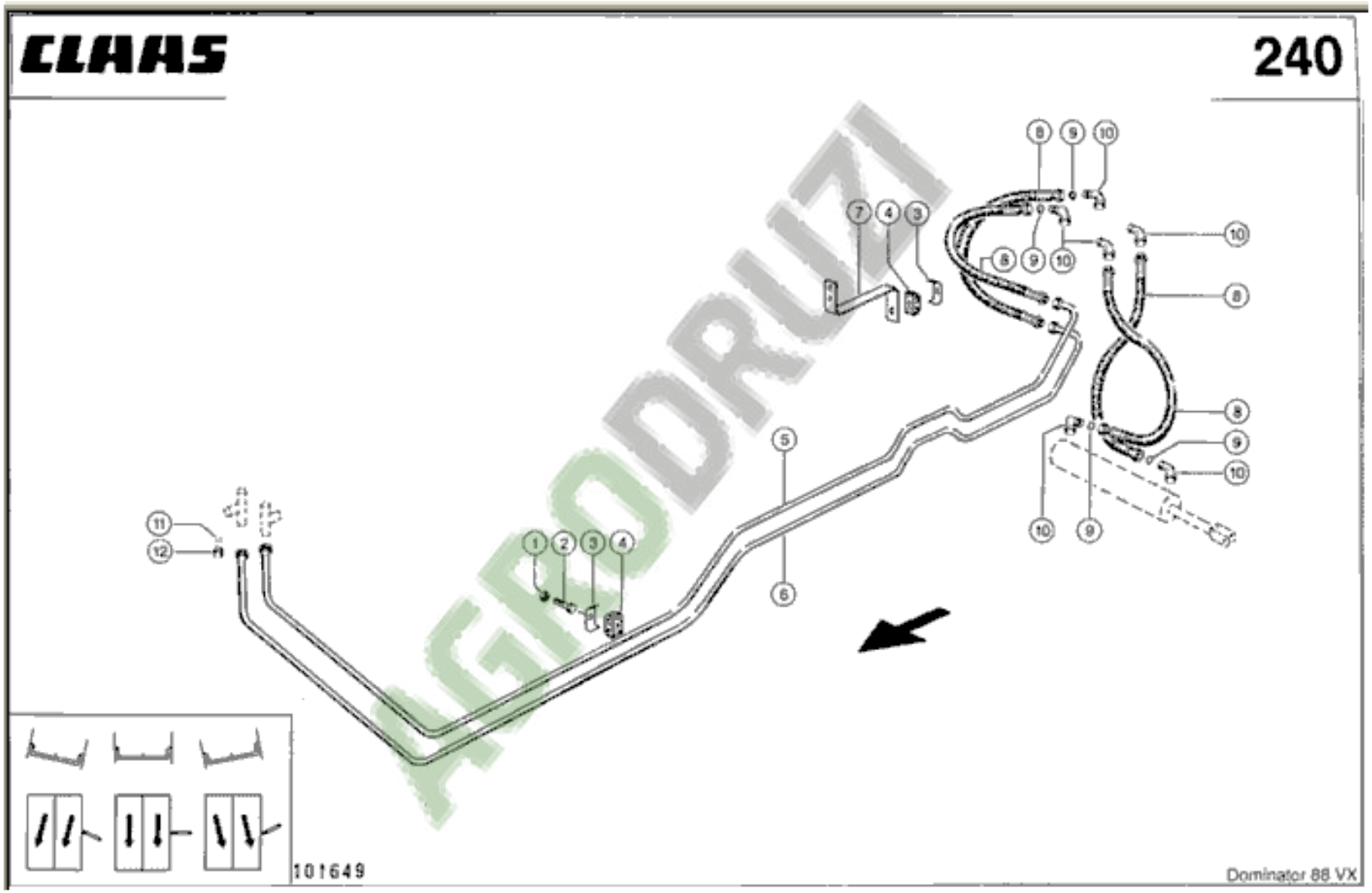
CLAAS
240
101649
Dominator 88 VX

CLAAS

## Fahrantrieb SAUER

241

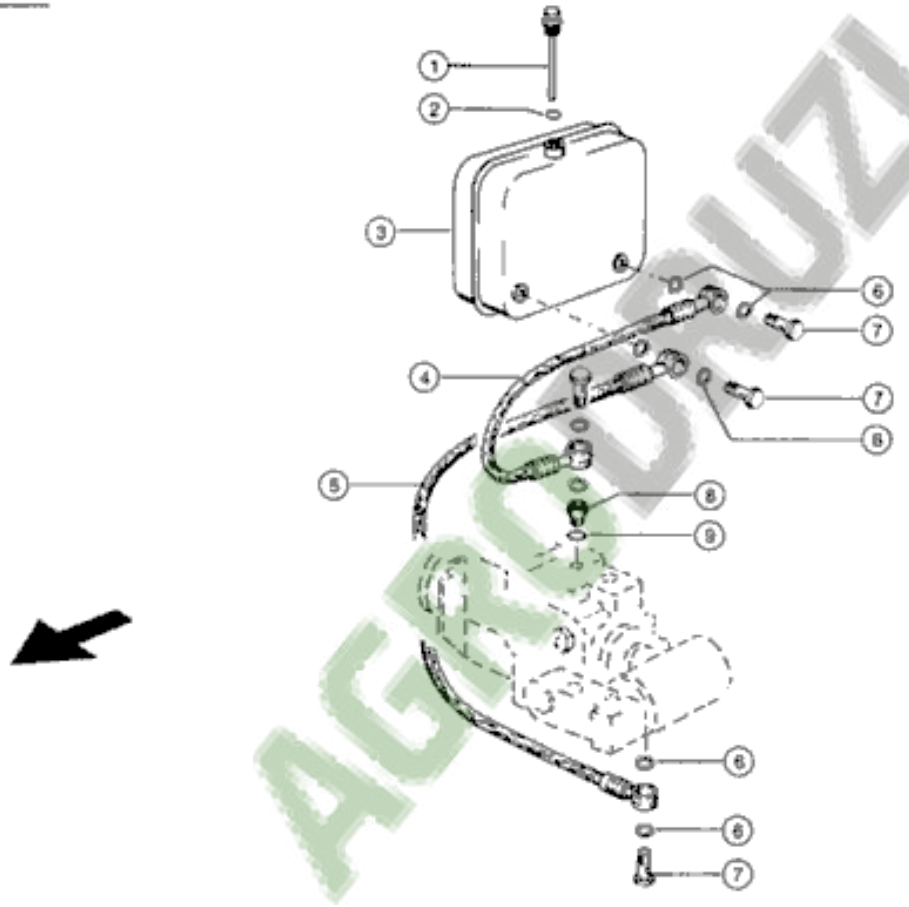


AGRODRUZI

101650

Dominator 88 VX

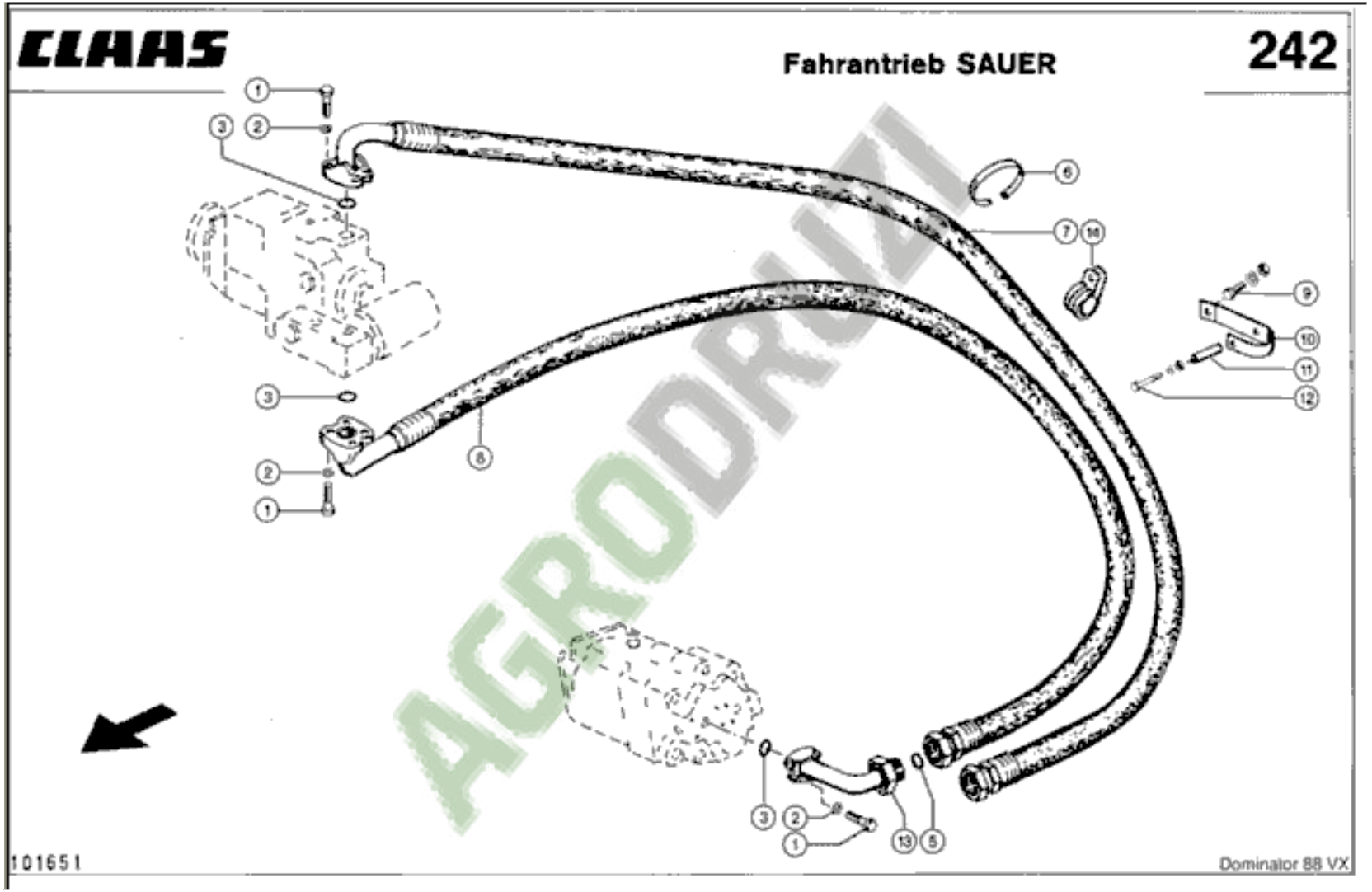
CLAAS
Fahrantrieb SAUER
242
101651
Dominator 88 VX

CLAAS

## Fahrantrieb SAUER

243

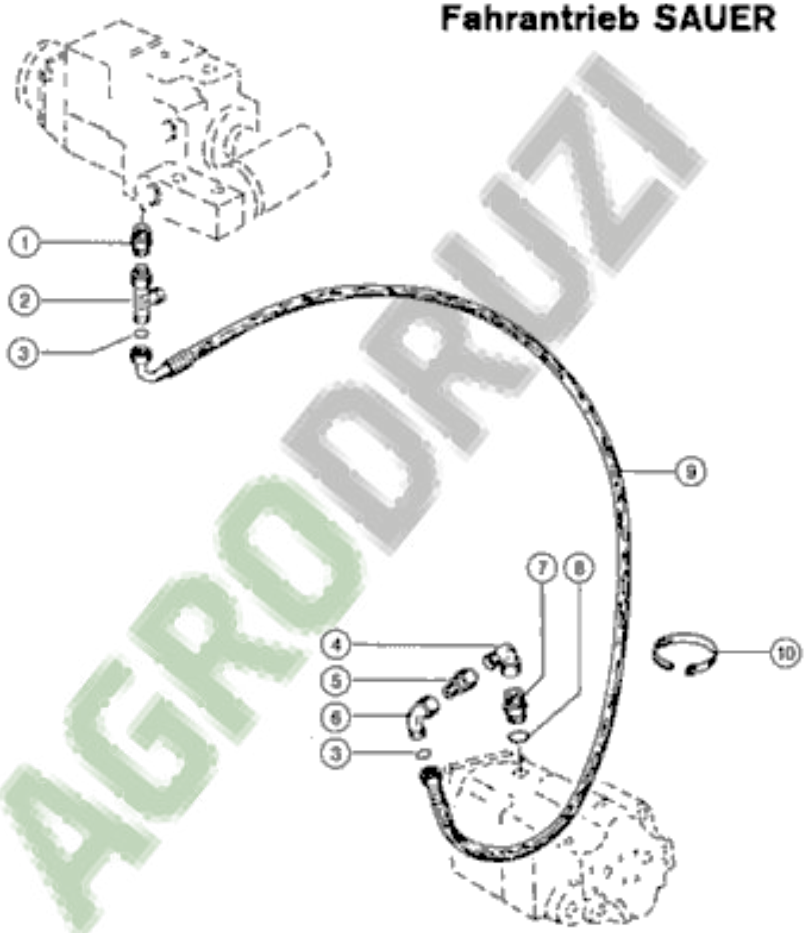


AGRODRUZI

101652

Dominator 88 VX

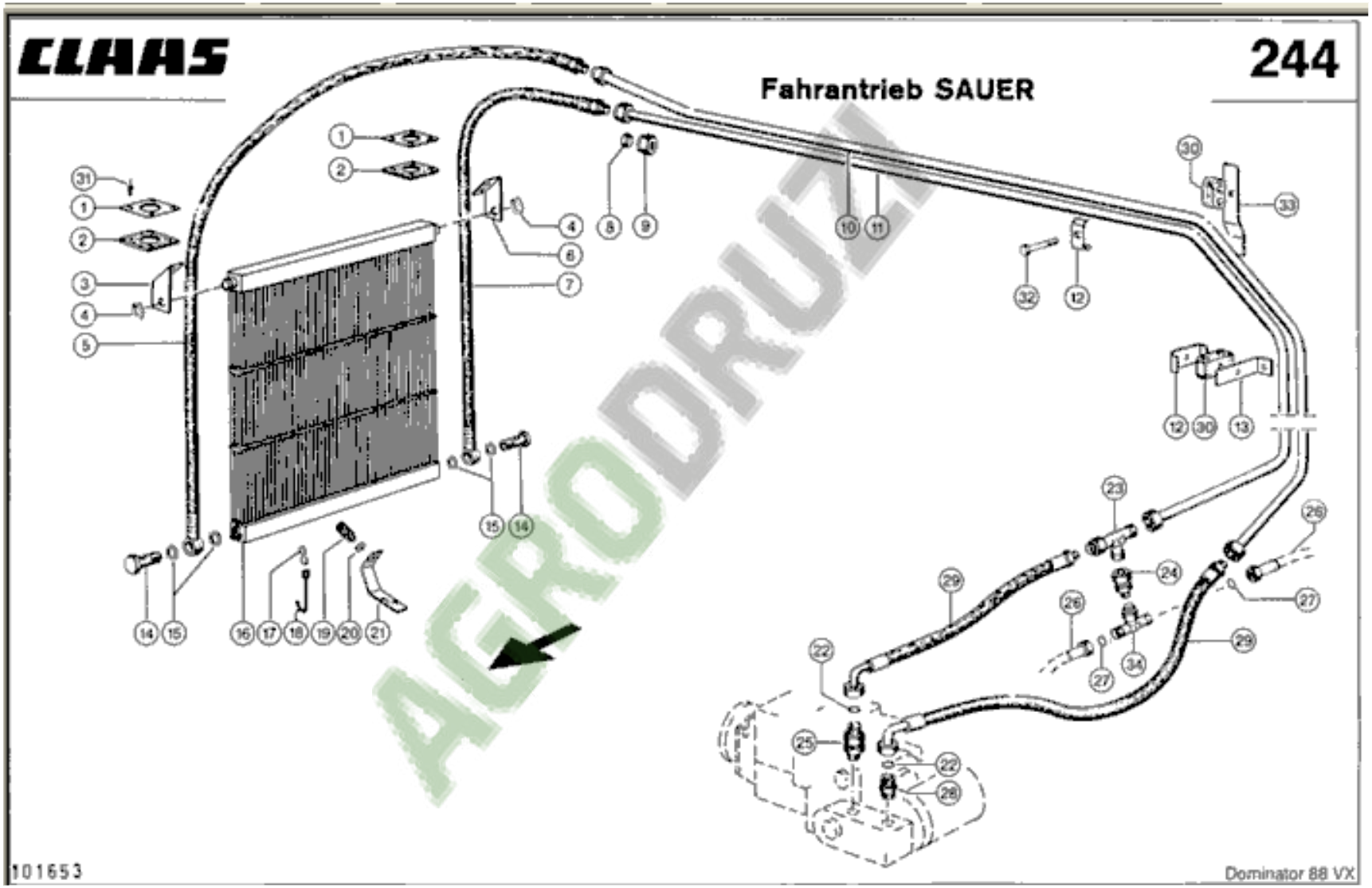


AGRODRUZI

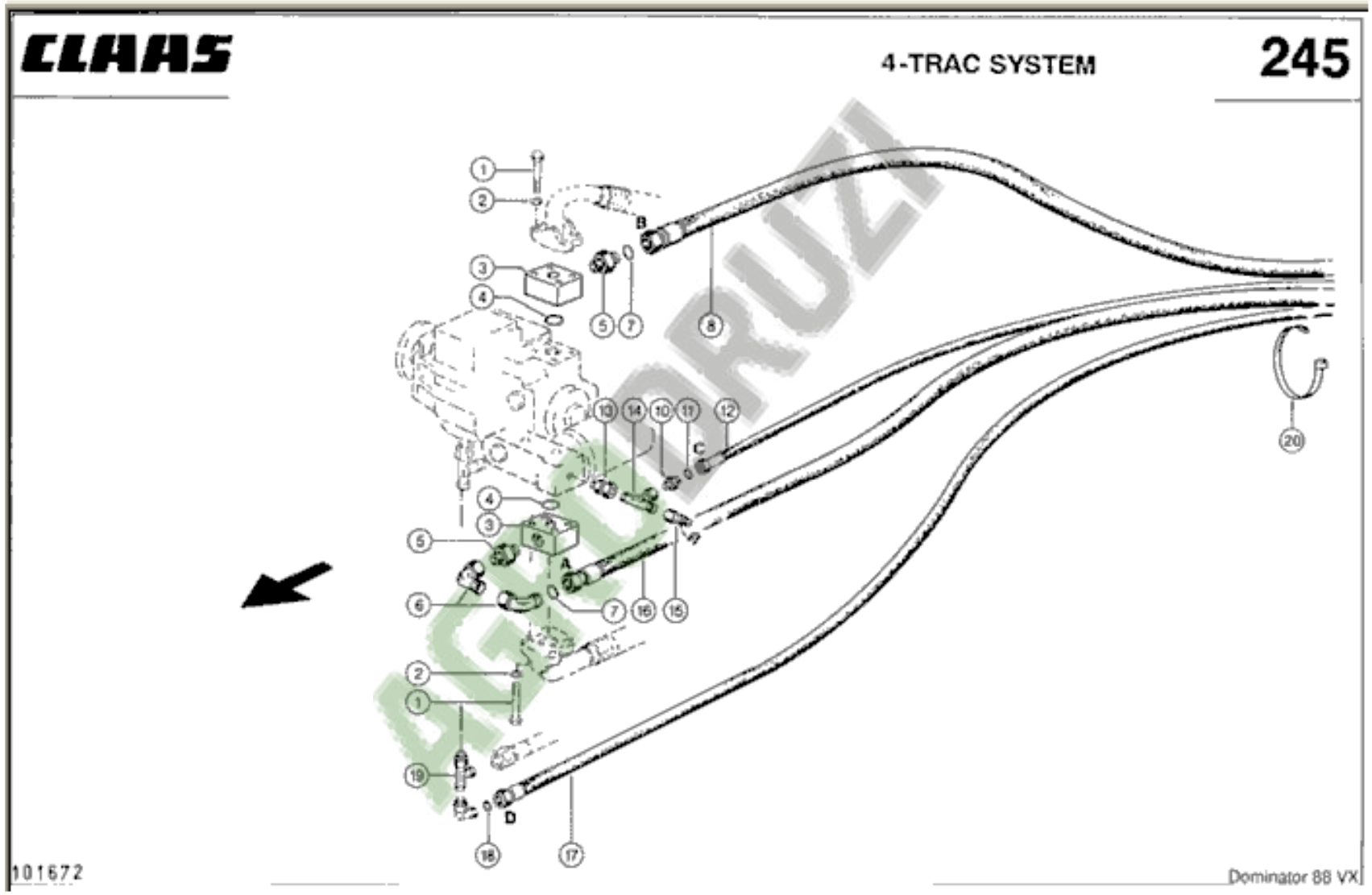
1
2
3
4
5
6
7
8
10
11
12
13
14
15
16
17
18
19
20
A
B
C
D
101672
Dominator 88 VX

AGRODRUZI

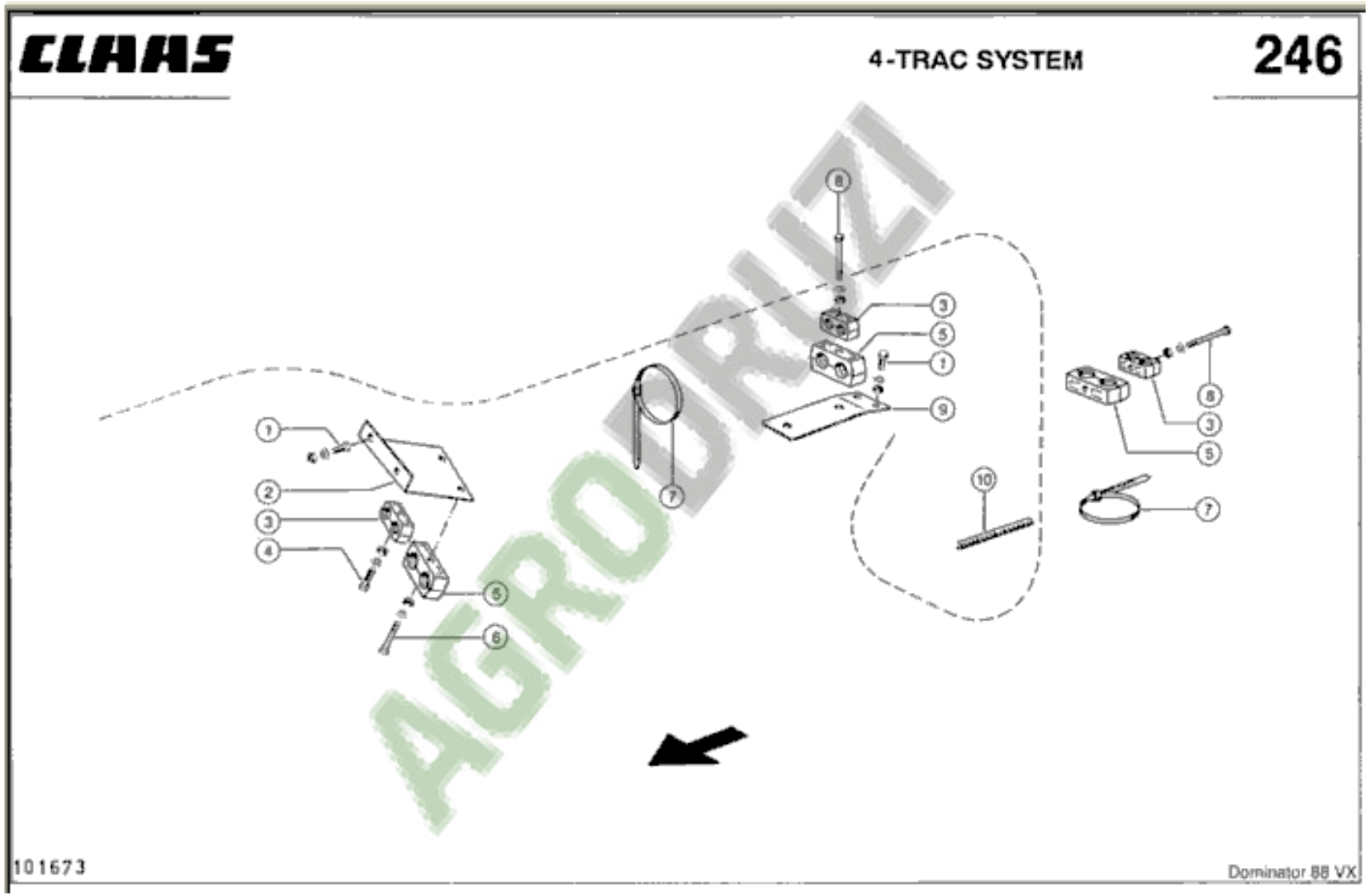
CLAAS
4-TRAC SYSTEM
246
101673
Dominator 88 VX

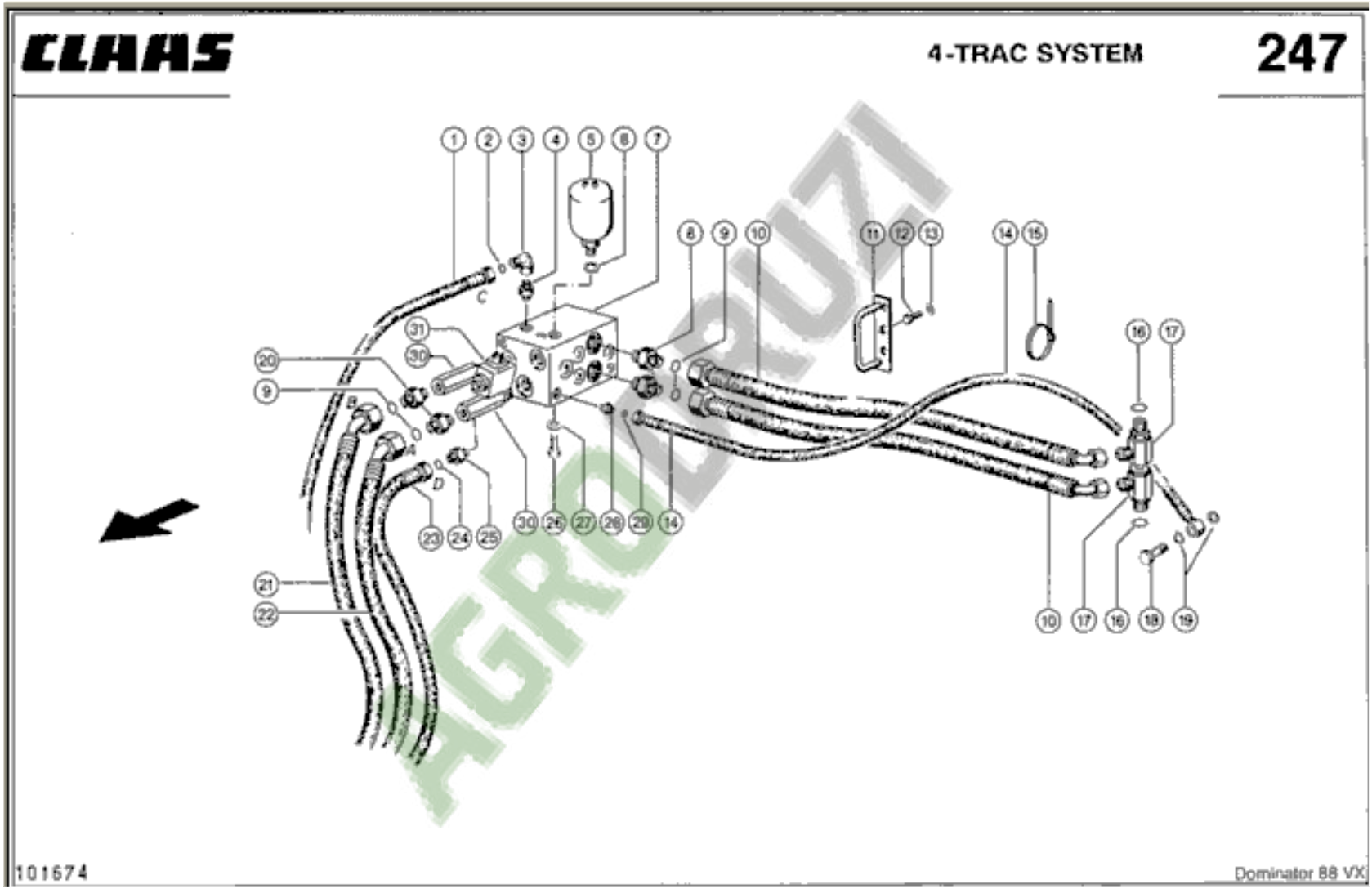
CLAAS
4-TRAC SYSTEM
247
101674
Dominator 88 VX

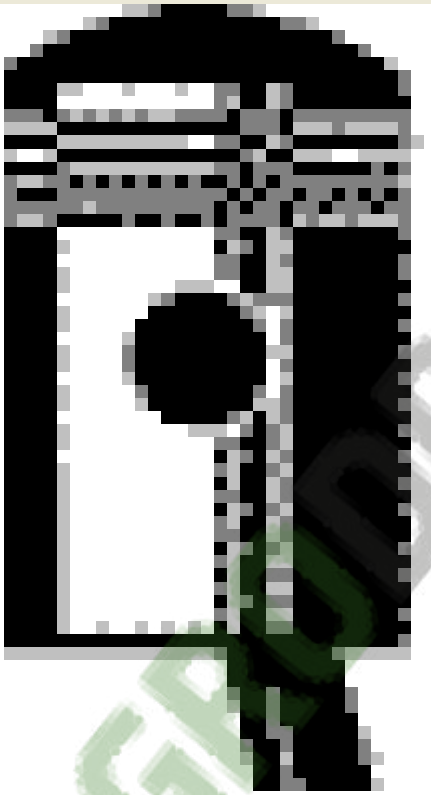

Motor

AGRODRUZI

## PERKINS 1006.6 T

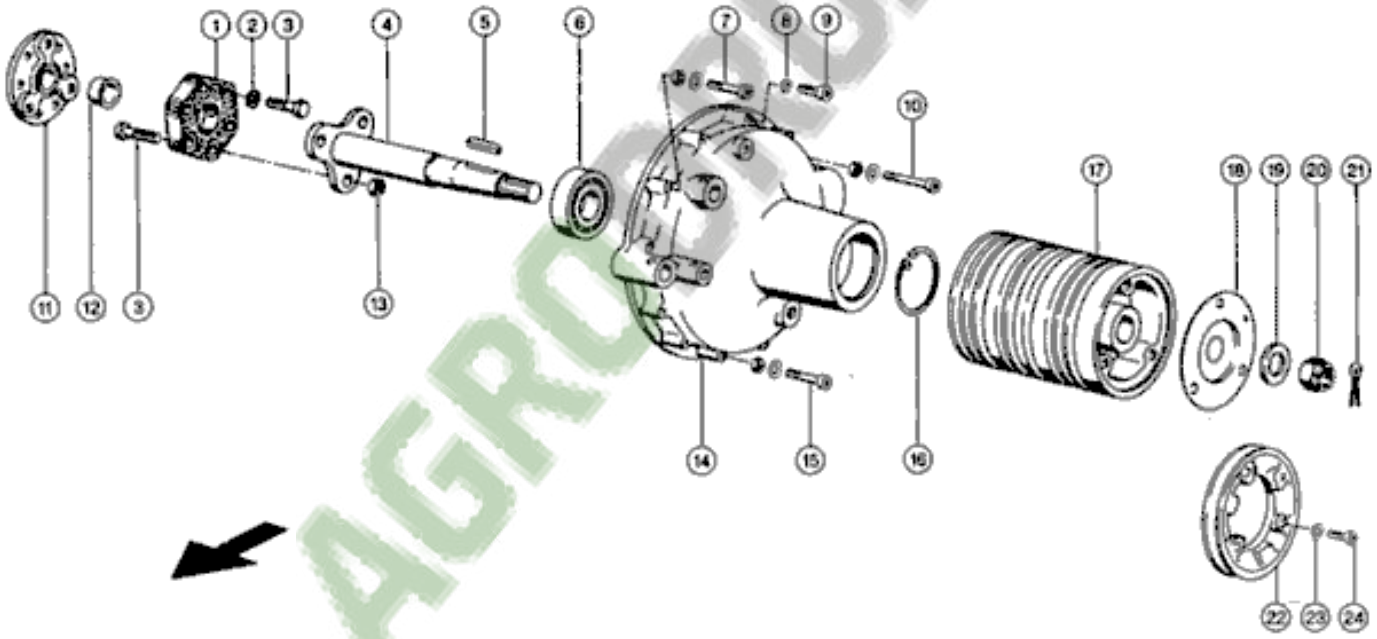


101514

Dominator 88 VX

AGRODRUZI

CLAAS

# PERKINS 1006 - 60 TW

251

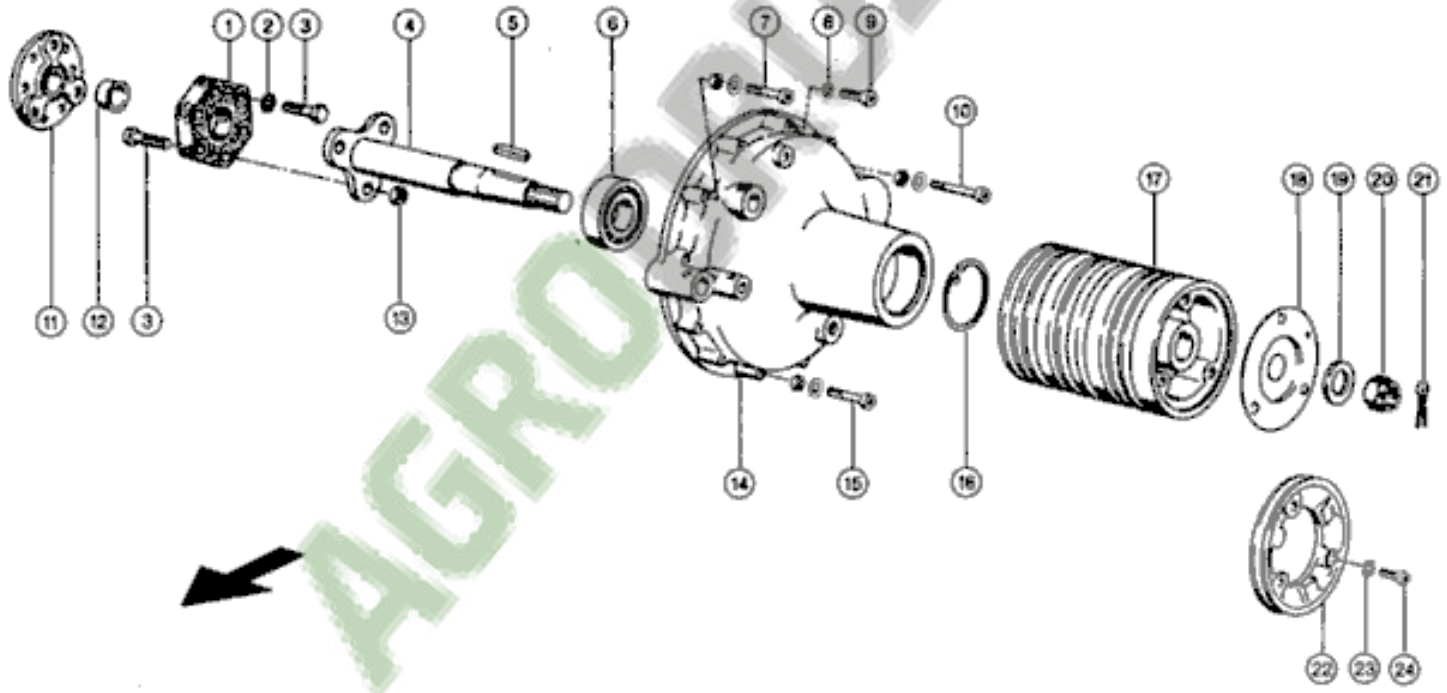


101515

Dominator 88 VK

AGRODRUZI

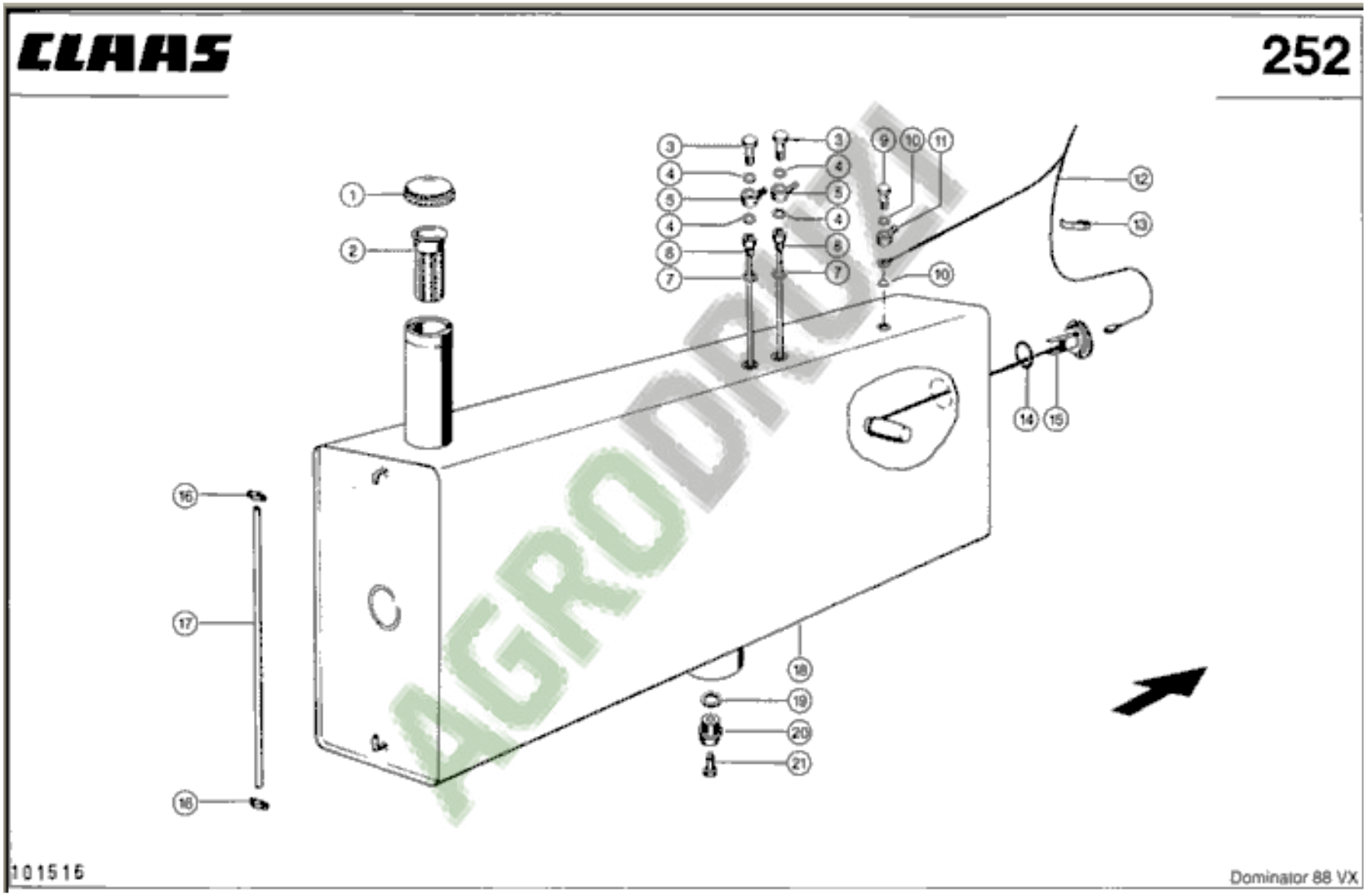
CLAAS
252
101516
Dominator 88 VX

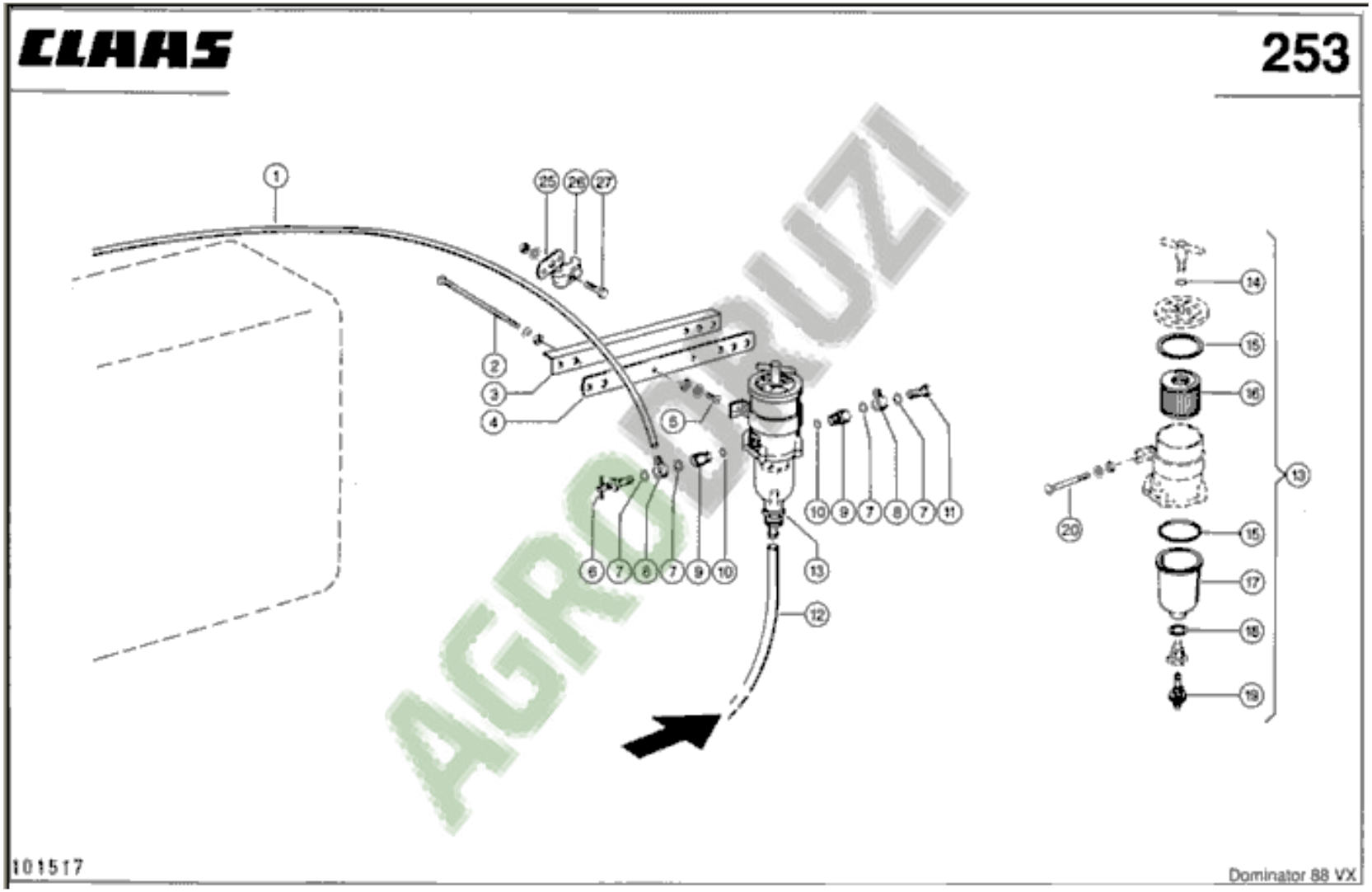
CLAAS
253
1
2
3
4
5
6
7
8
9
10
11
12
13
14
15
16
17
18
19
20
25
26
27
101517
Dominator 88 VX

AGROBRUZI

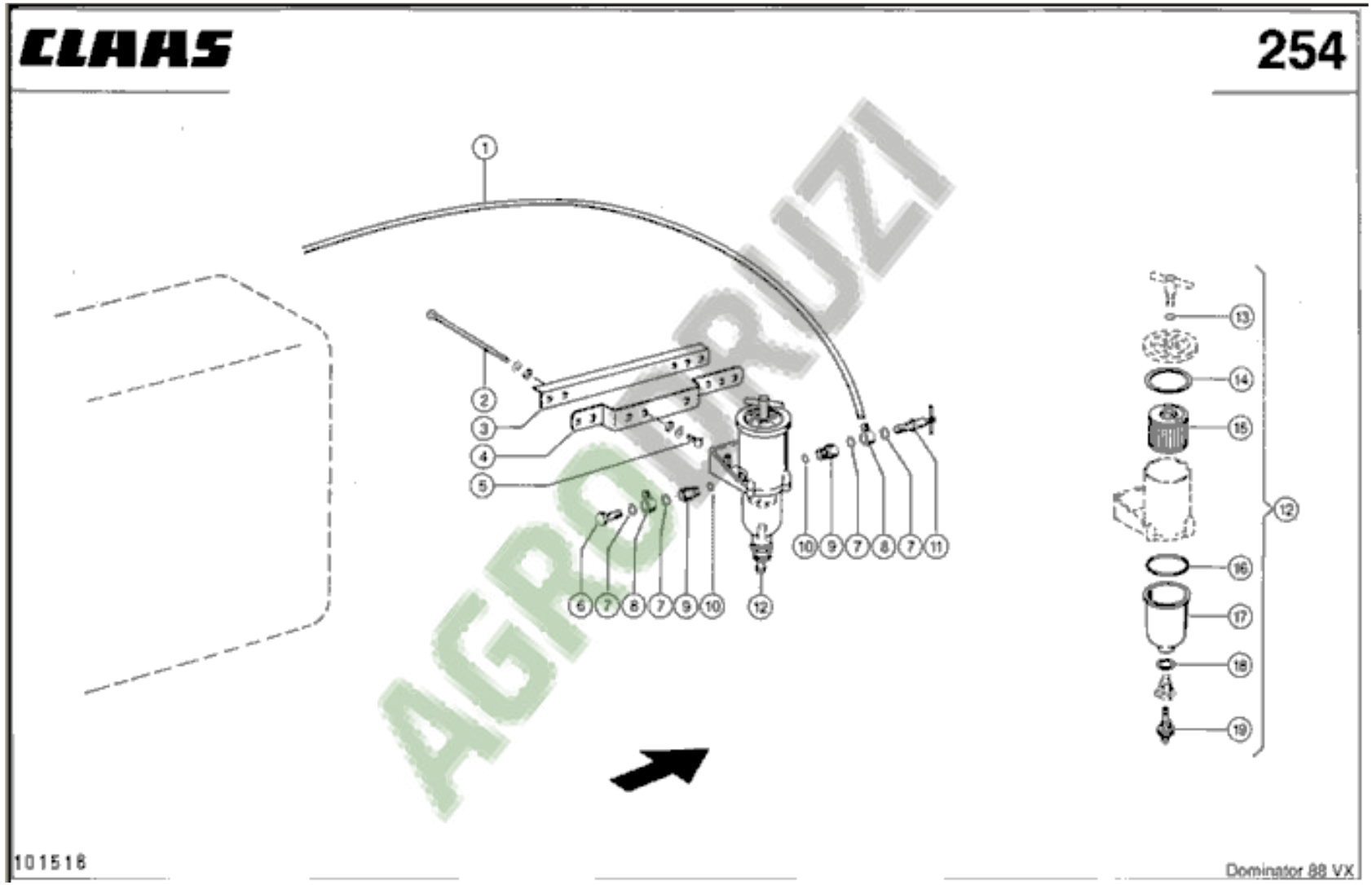
CLAAS
254
1
2
3
4
5
6
7
8
7
9
10
12
10
9
7
8
7
11
13
14
15
12
16
17
18
19
101516
Dominator 88 VX

AGROPRUZI

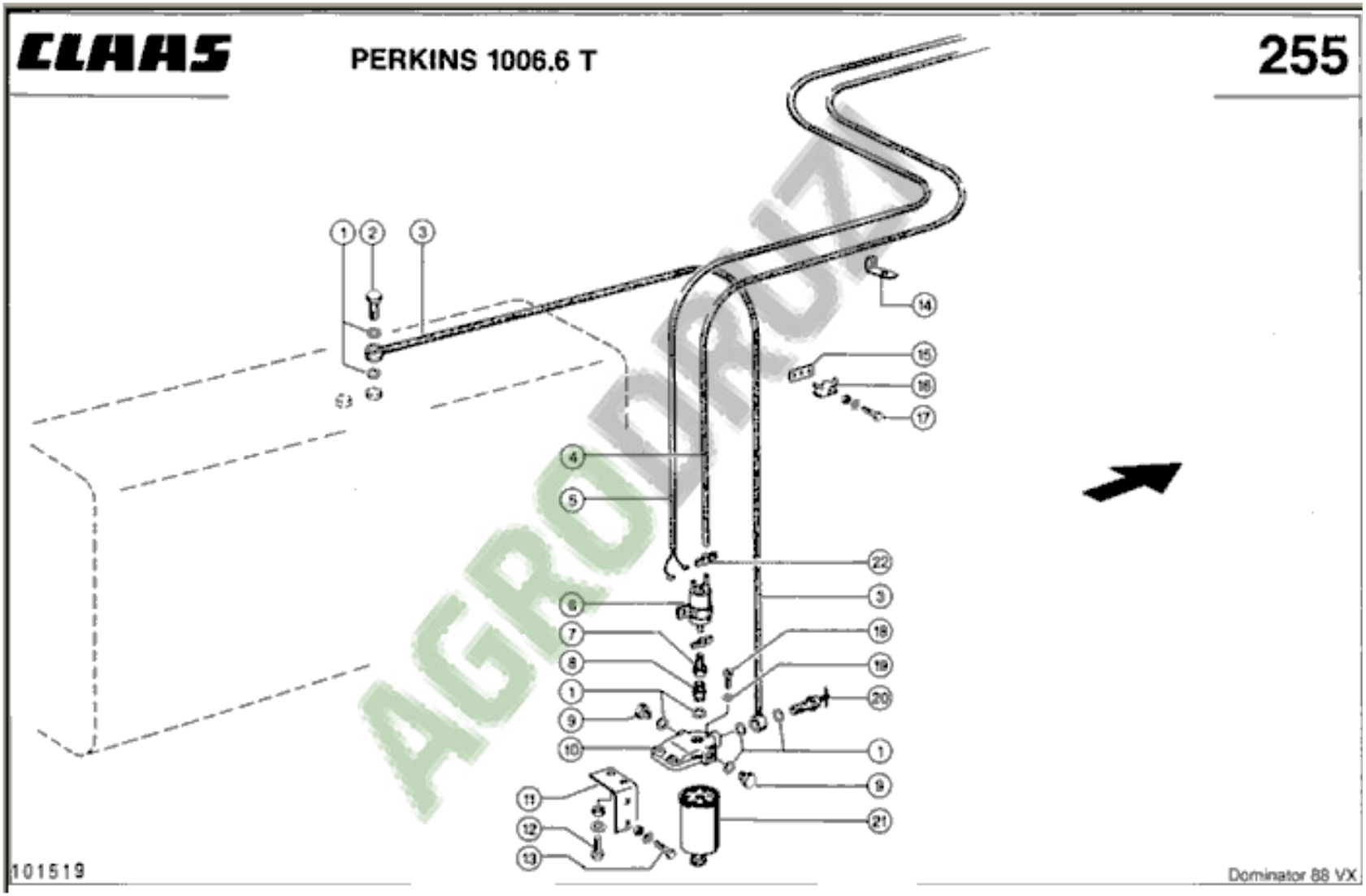
CLAAS
PERKINS 1006.6 T
255
101519
Dominator 88 VX

CLAAS

256

## PERKINS 1006.6 T

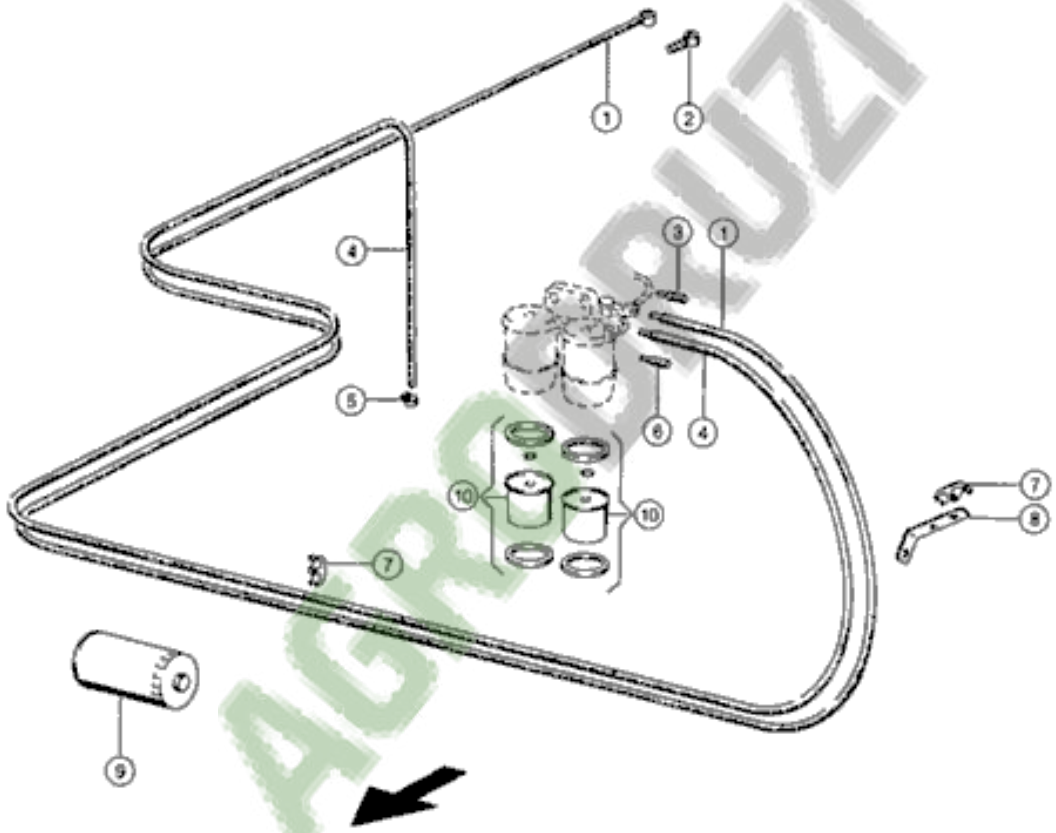


AGROPRUZI

101520

Dominator 88 VX

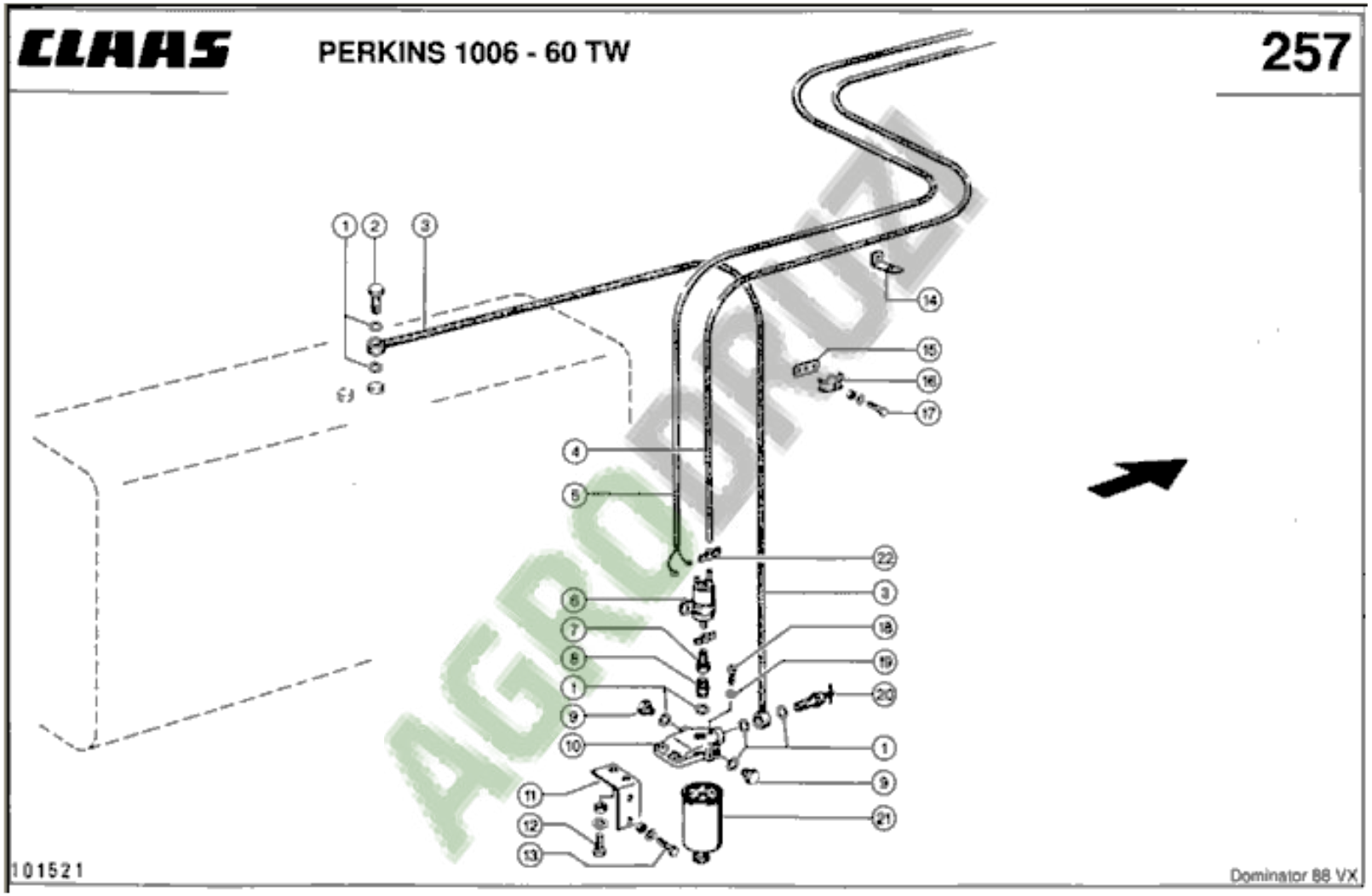
CLAAS
PERKINS 1006 - 60 TW
257
101521
Dominator 88 VX

# PERKINS 1006 - 60 TW



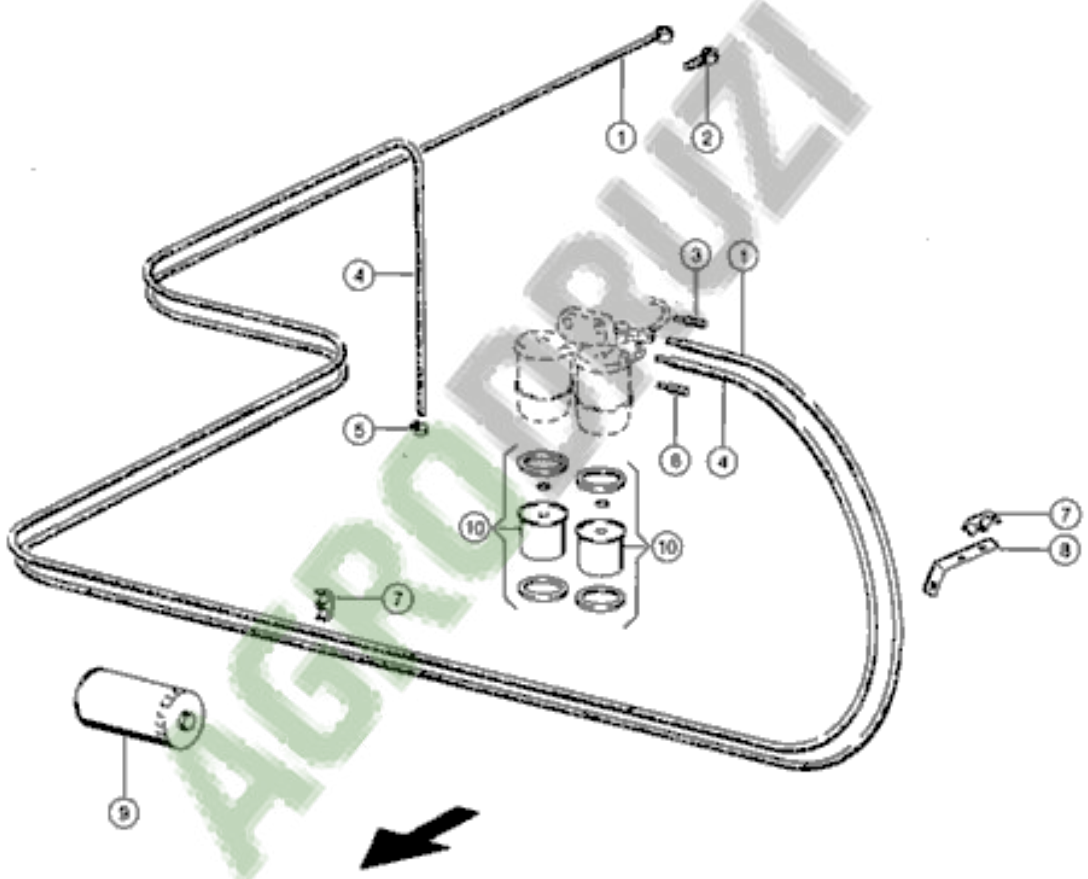


AGROBRUZI

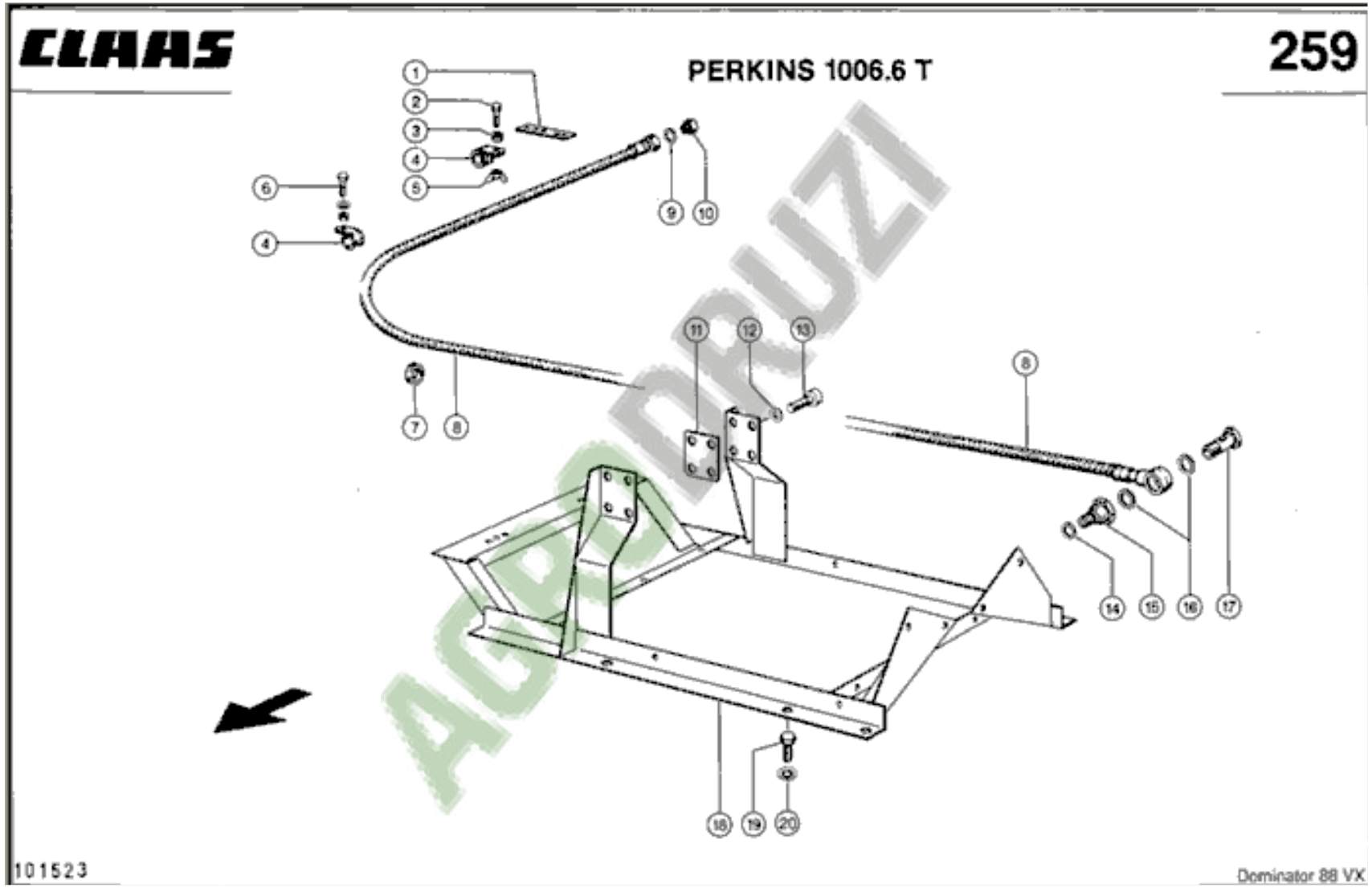
CLAAS
PERKINS 1006.6 T
259
1
2
3
4
5
6
4
7
8
9
10
11
12
13
8
14
15
16
17
18
19
20
101523
Dominator 88 VX

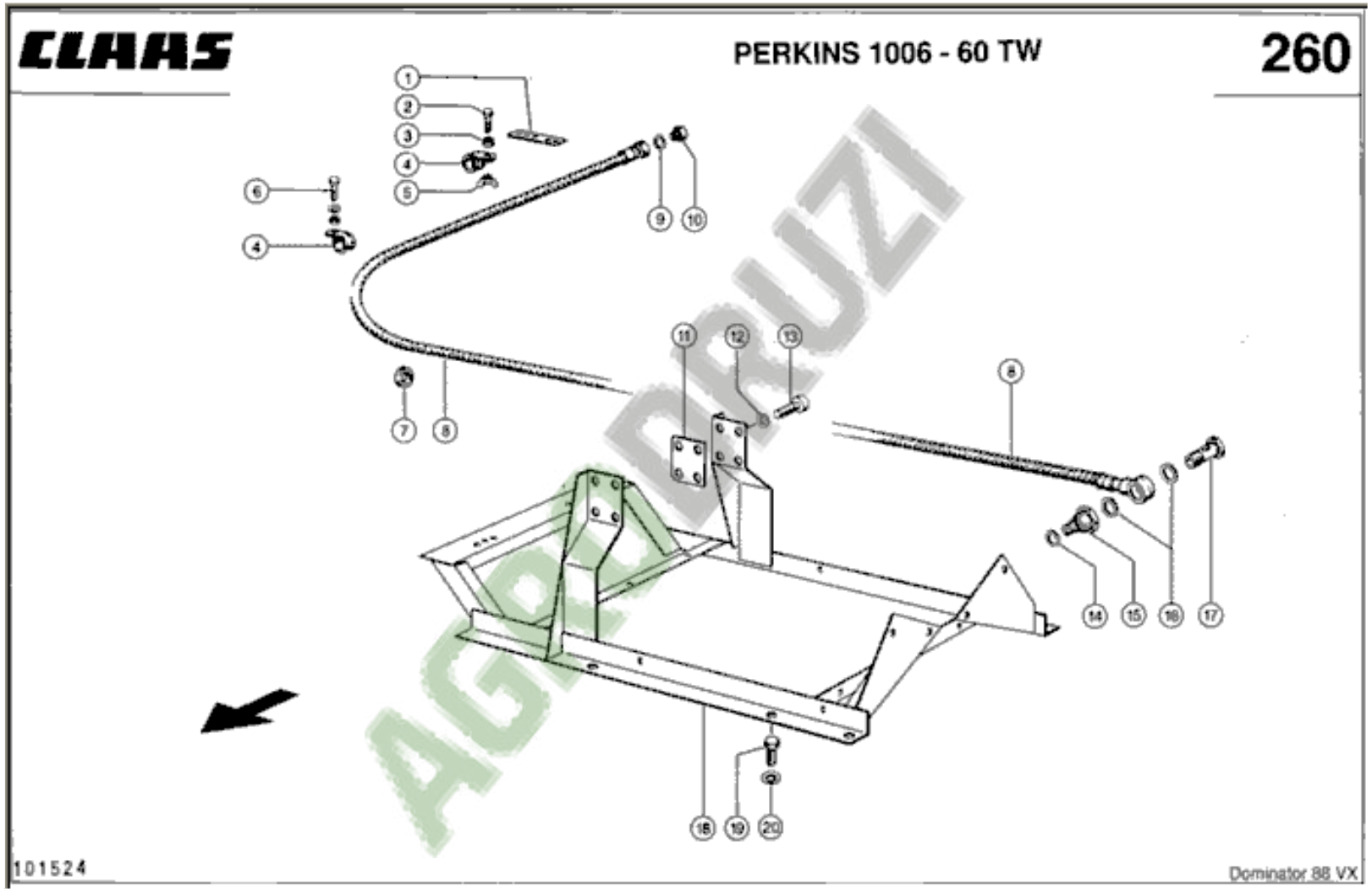
CLAAS
PERKINS 1006 - 60 TW
260
101524
Dominator 88 VX

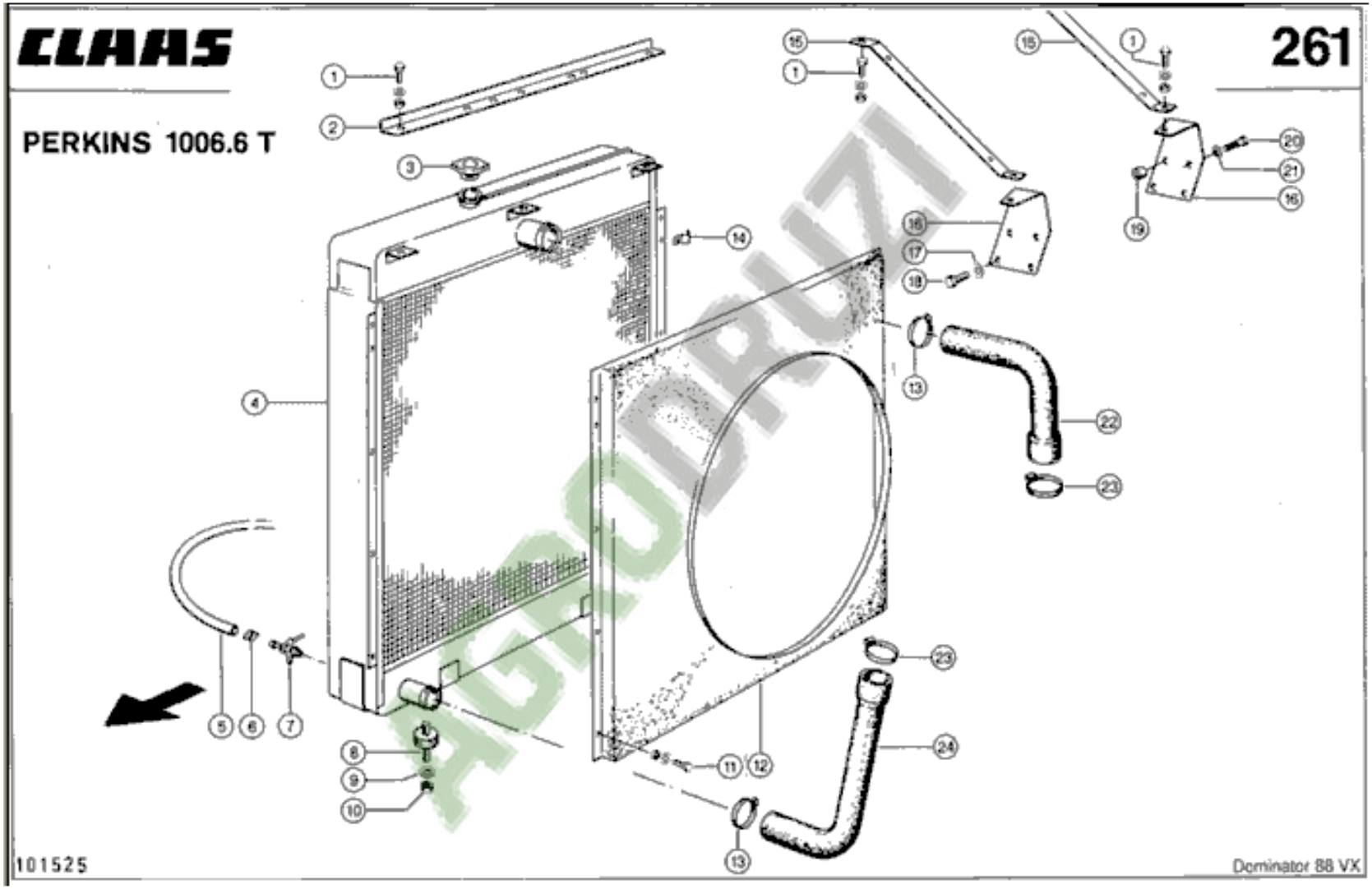
CLAAS
261
PERKINS 1006.6 T
101525
Dominator 88 VX

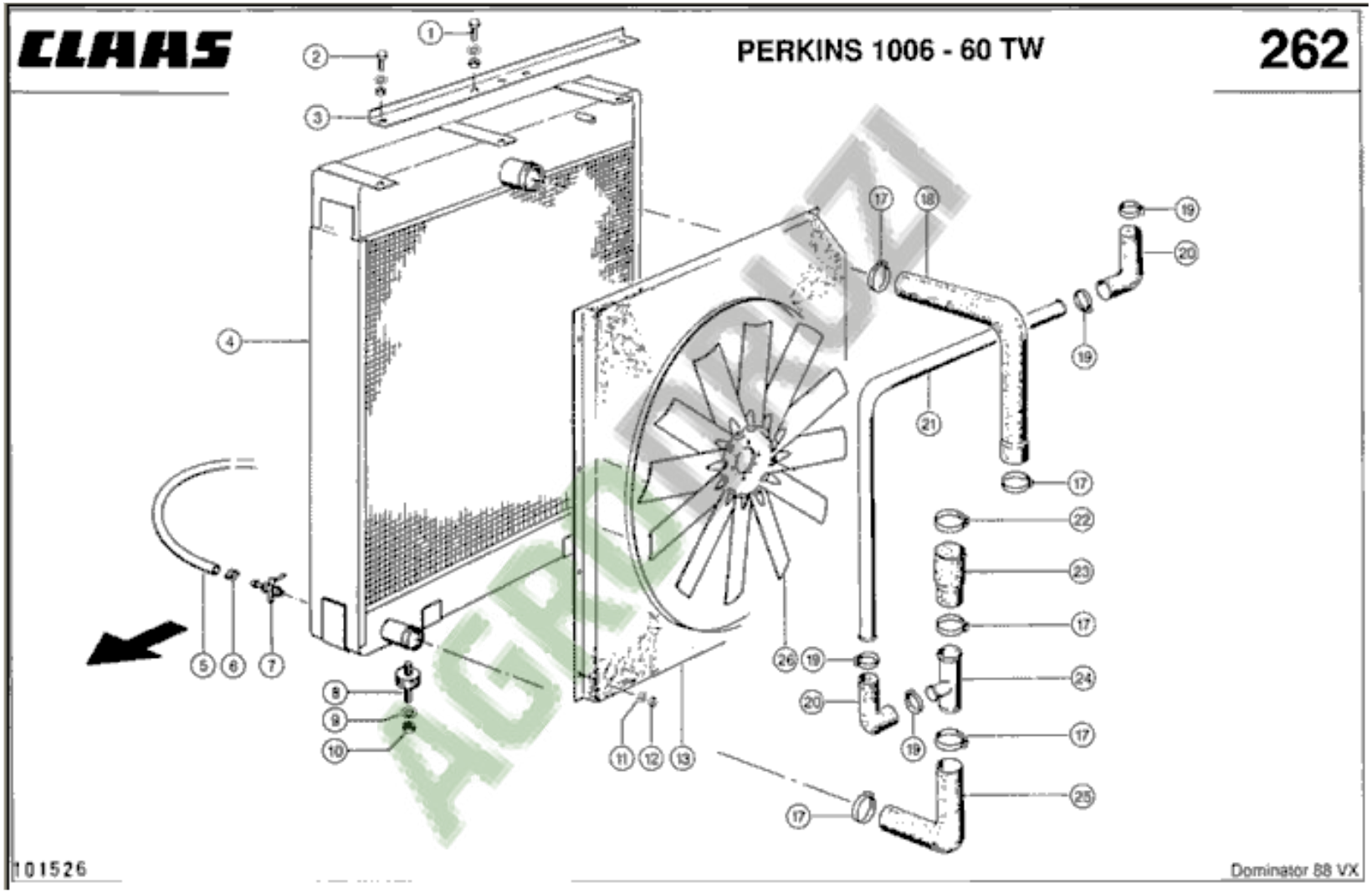
CLAAS
PERKINS 1006 - 60 TW
262
101526
Dominator 88 VX

CLAAS

# PERKINS 1006 - 60 TW

263

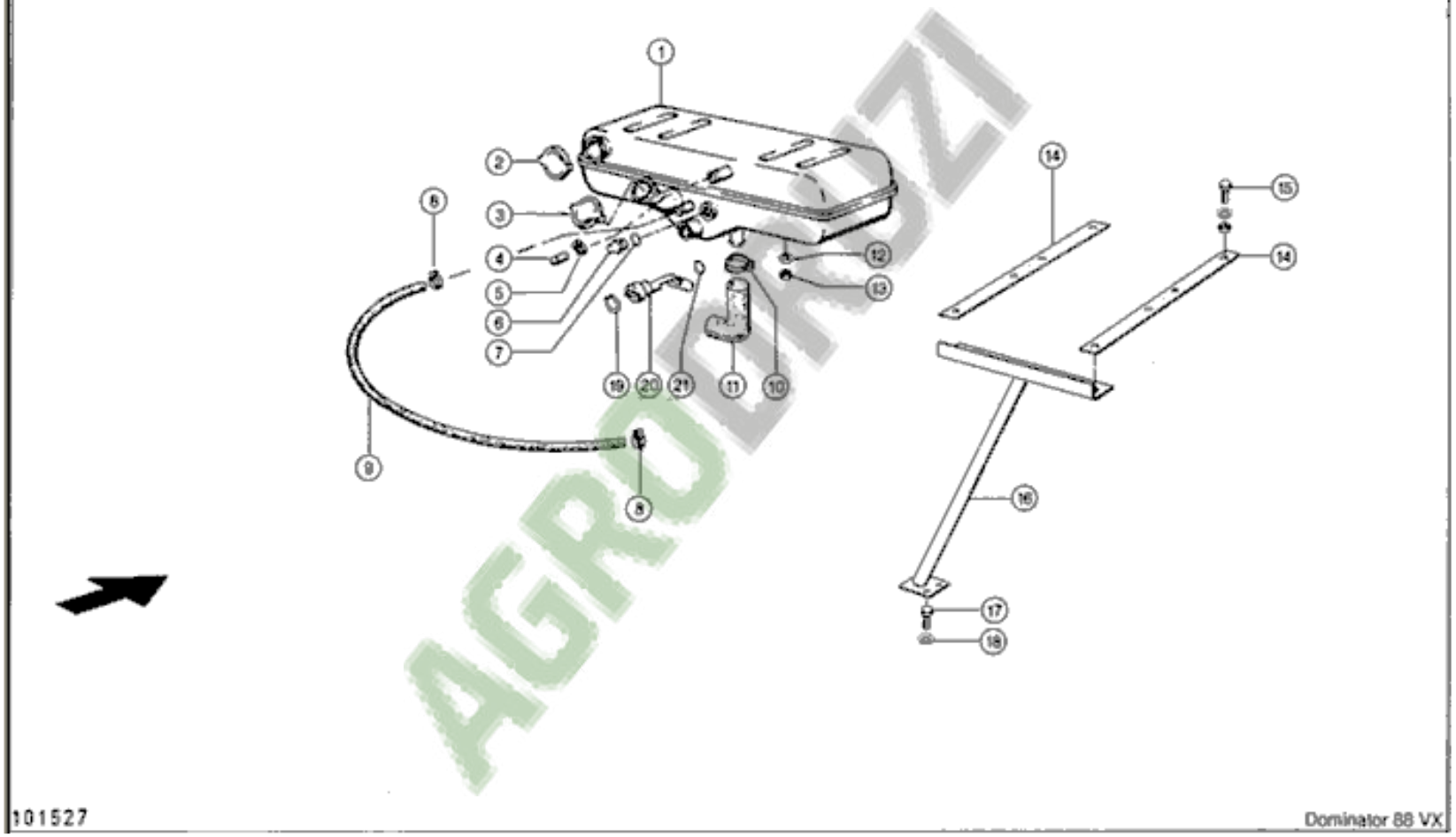


101527

Dominator 88 VX

AGRODRUZI

CLAAS

# PERKINS 1006.6 T

264

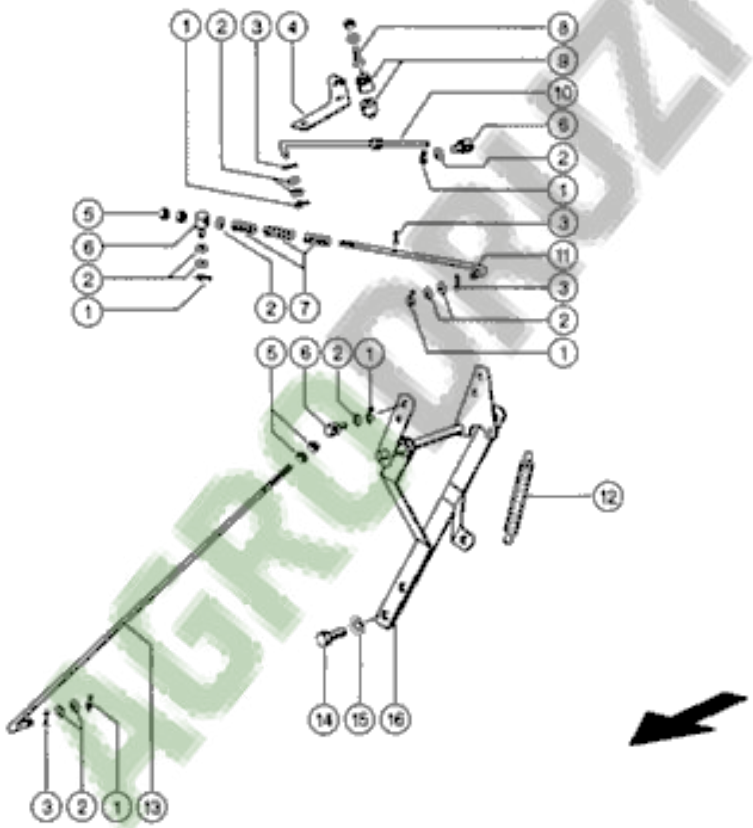


AGROCRUZI

101528

Dominator 88 VX

CLAAS

# PERKINS 1006 - 60 TW

265

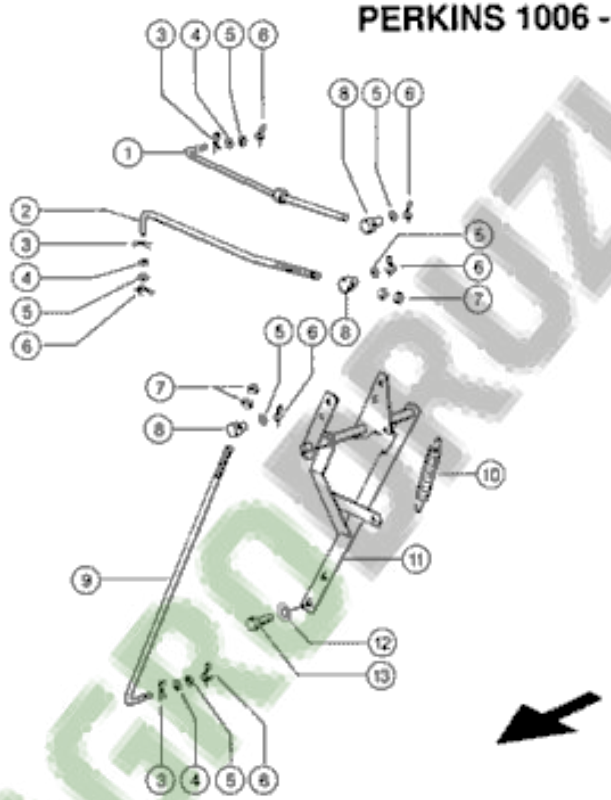


AGROCRUZI

101529

Dominator 88 VX

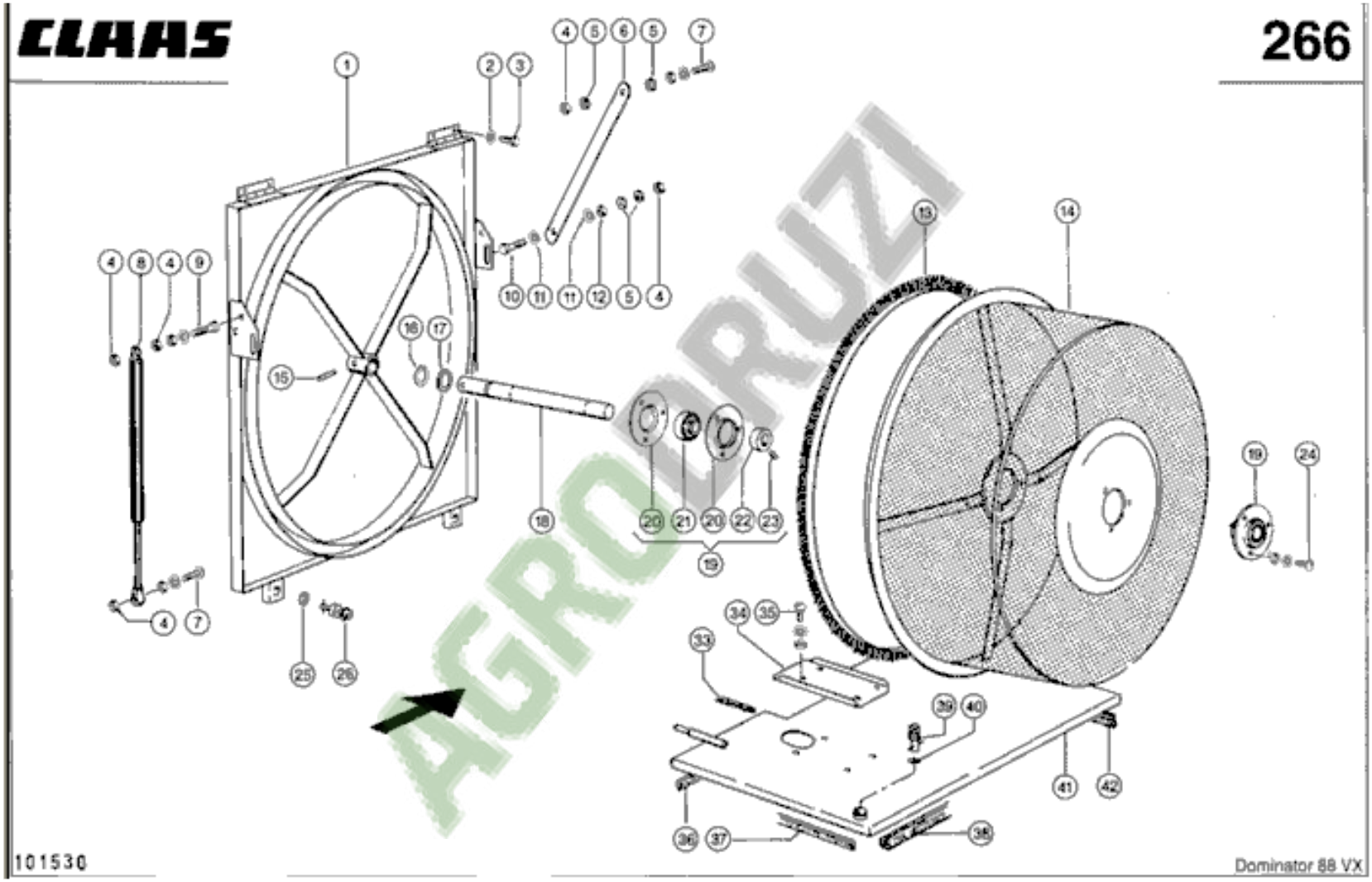


AGROBRUZI

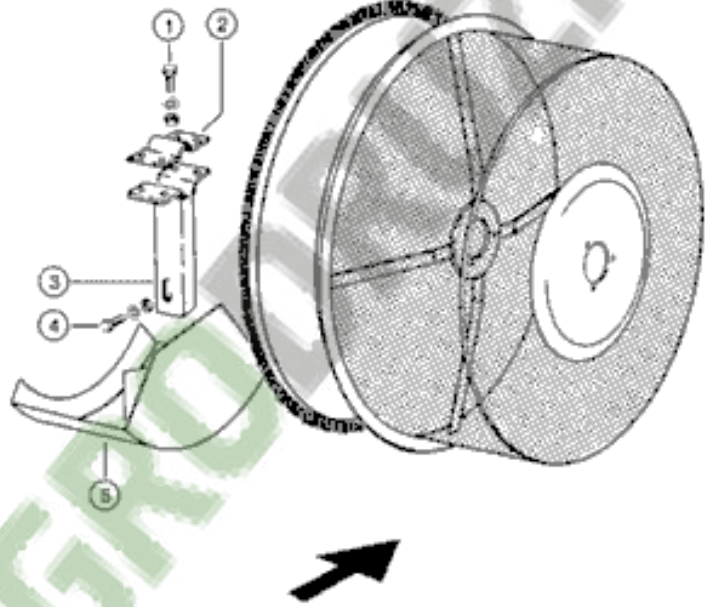


AGRODAVI

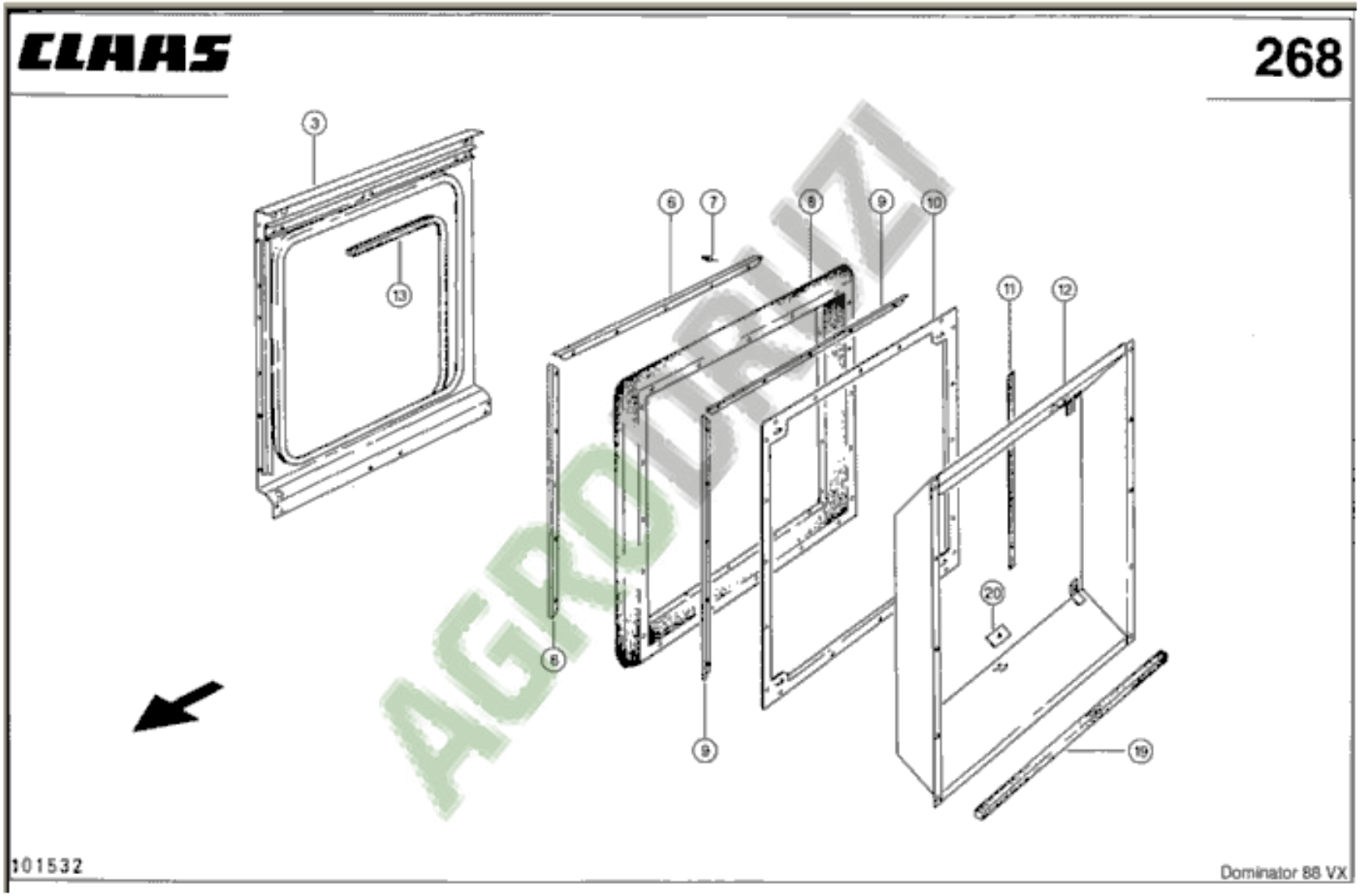
CLAAS
268
3
13
6
7
8
9
10
11
12
20
8
9
19
101532
Dominator 88 VX

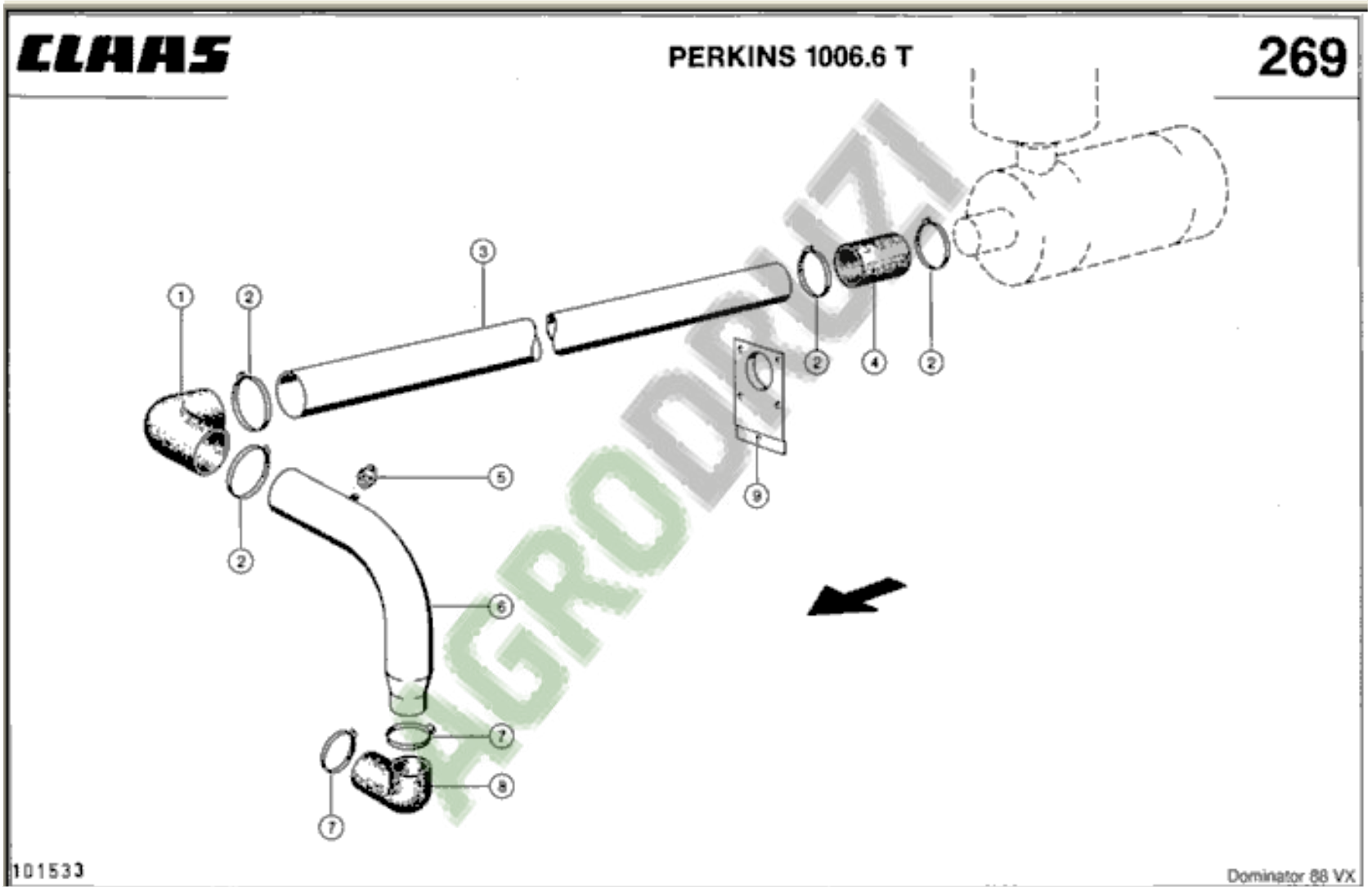
CLAAS
PERKINS 1006.6 T
269
1
2
3
2
4
2
5
2
6
7
8
7
9
101533
Dominator 88 VX

CLAAS

# PERKINS 1006 - 60 TW

270

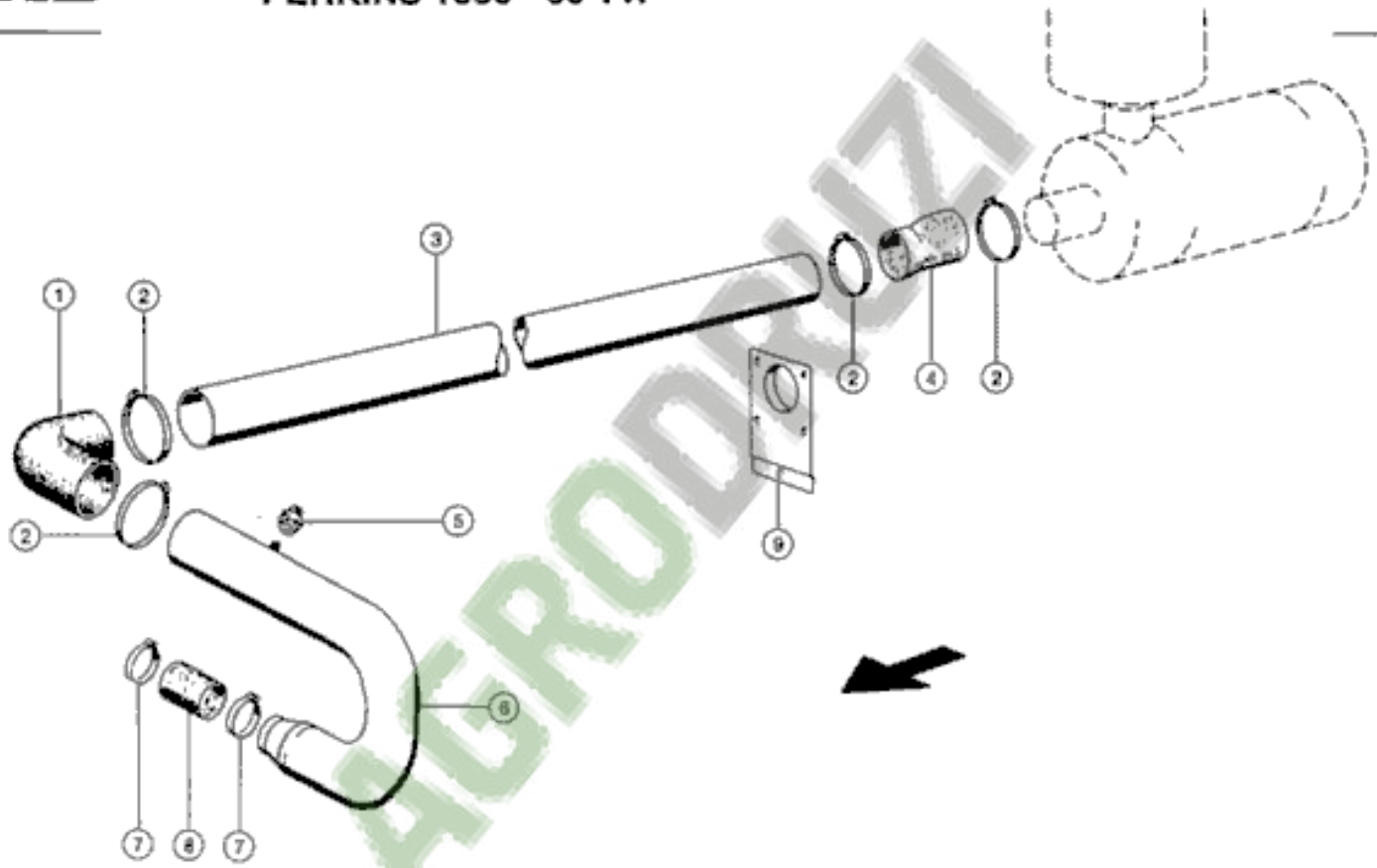


AGRODRUZI

101534

Dominator 88 VX

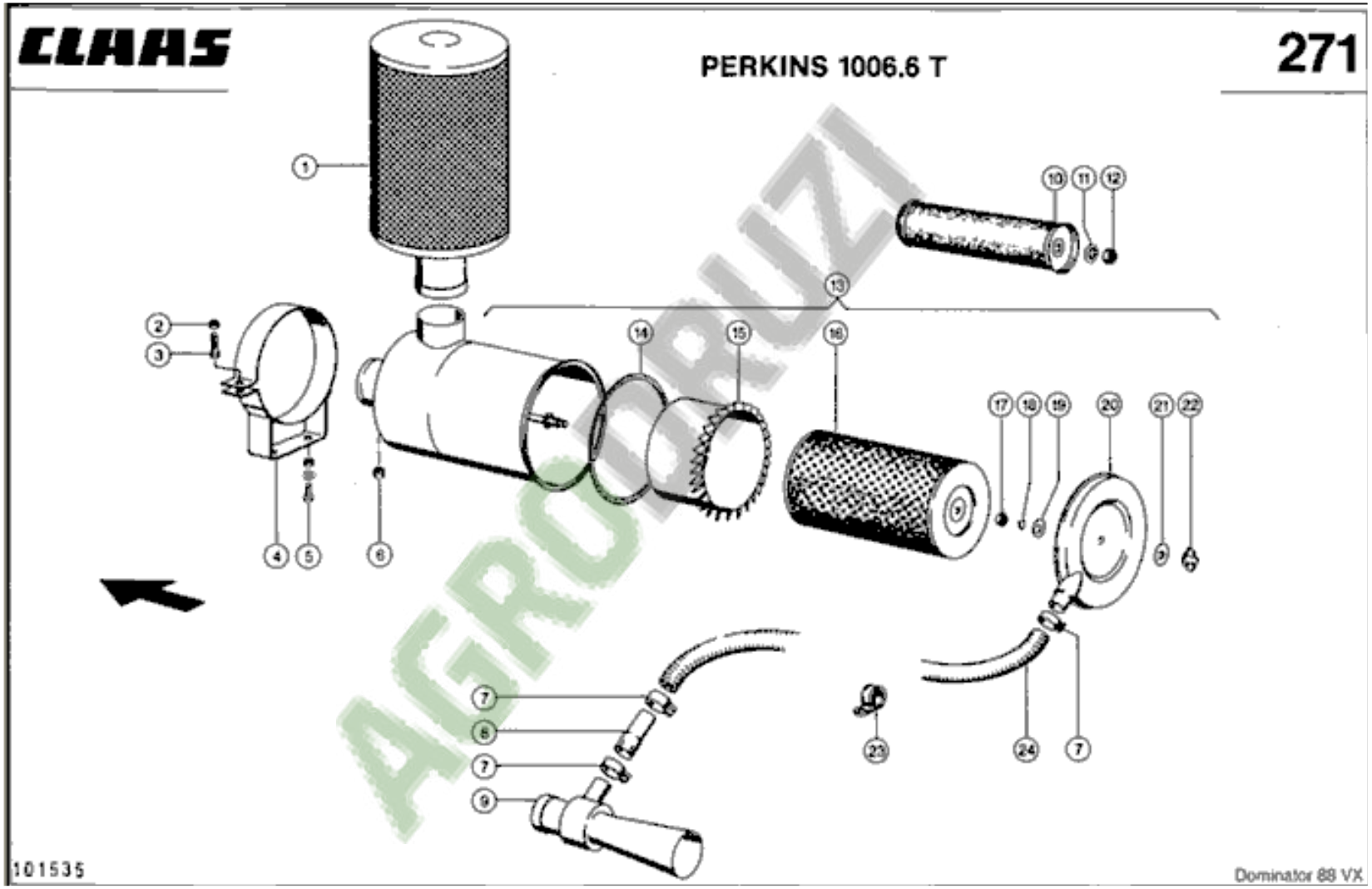


AGRODRUZI

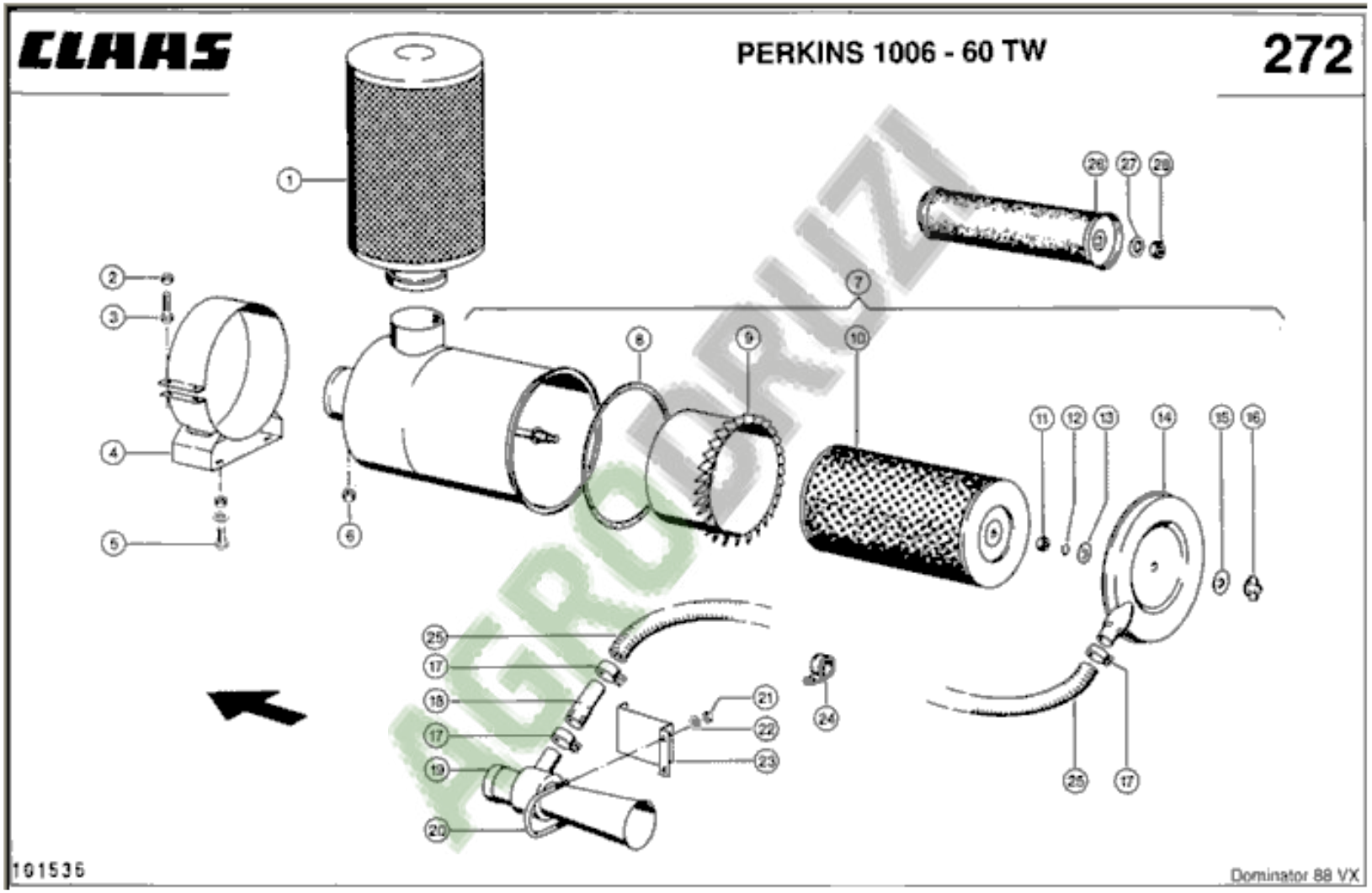
CLAAS
PERKINS 1006 - 60 TW
272
101536
Dominator 88 VX

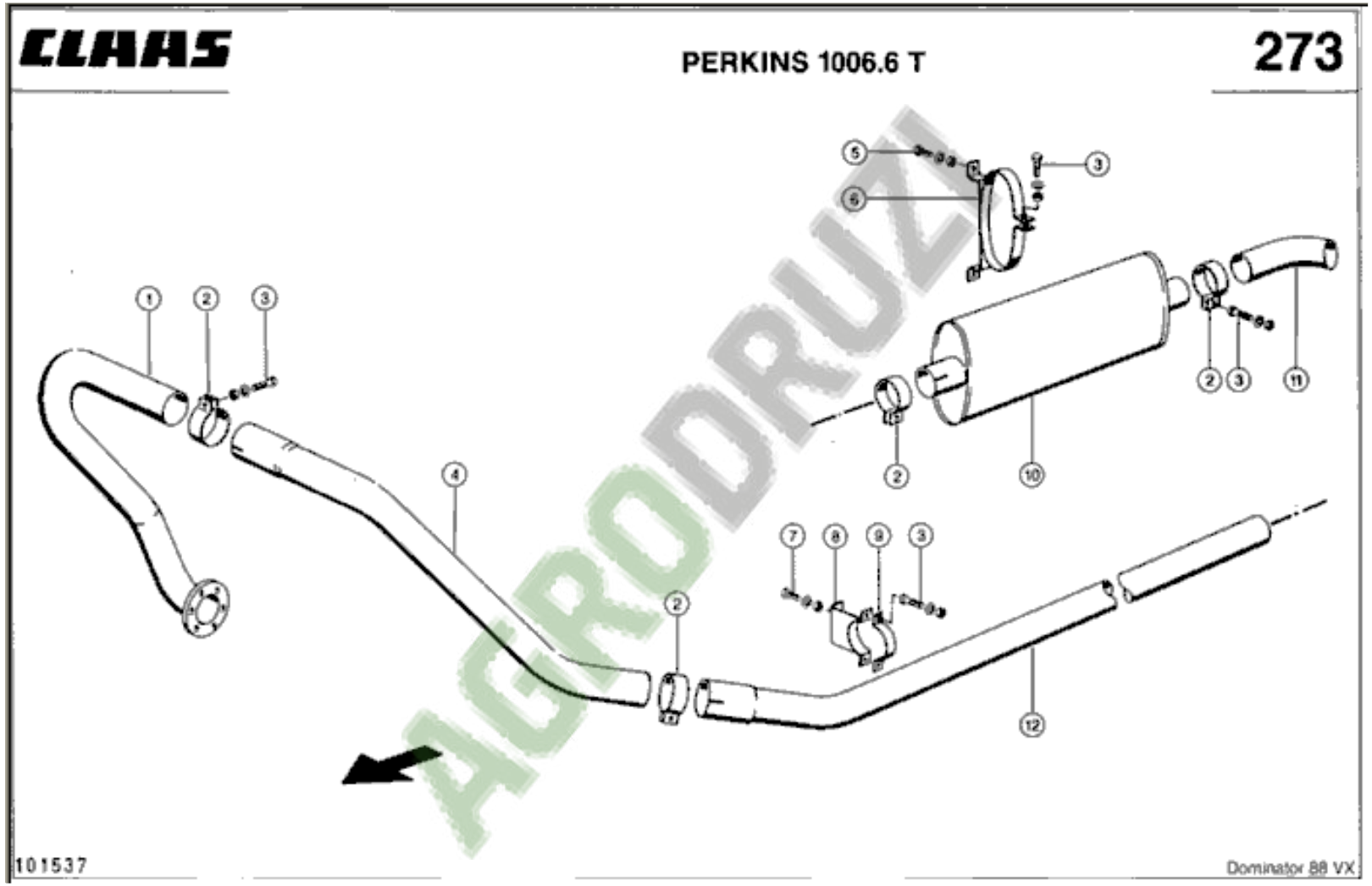
CLAAS
PERKINS 1006.6 T
273
101537
Dominator 88 VX

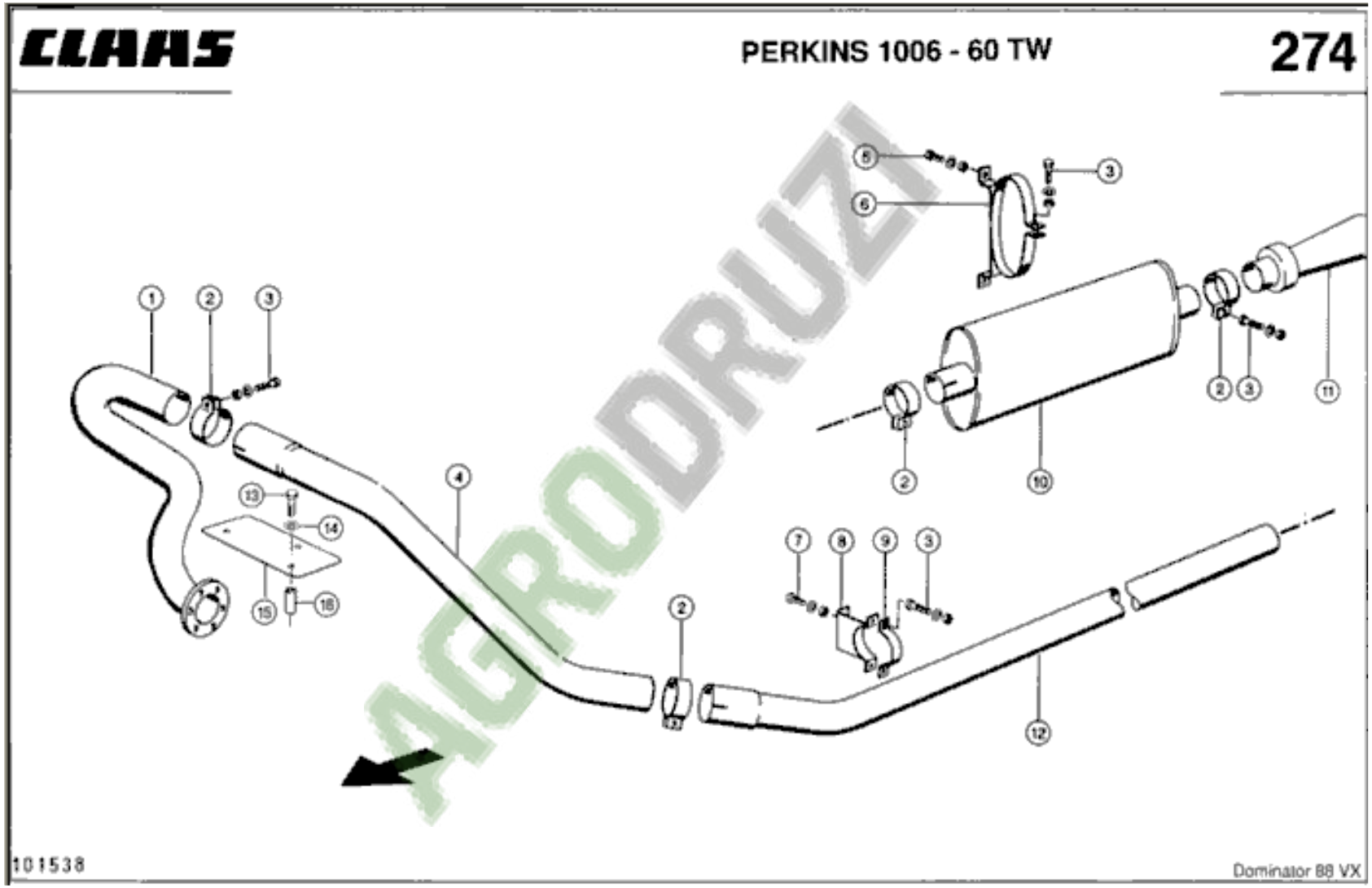
CLAAS
PERKINS 1006 - 60 TW
274
101538
Dominator 88 VX

## PERKINS 1006.6 T

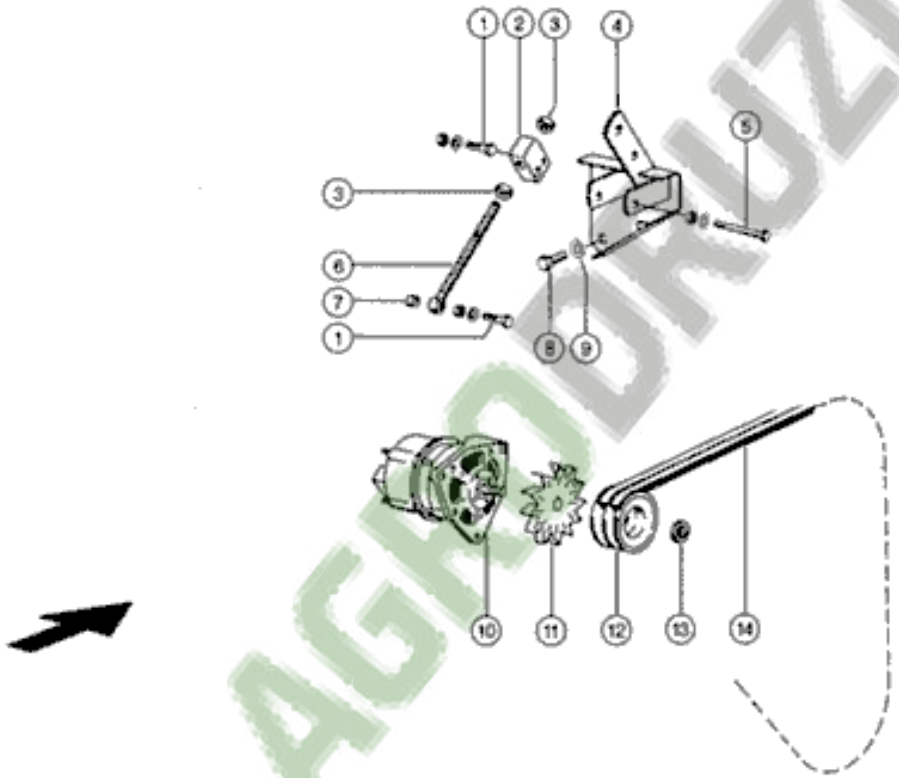


AGRODRUZI

CLAAS

## PERKINS 1006 - 60 TW

276

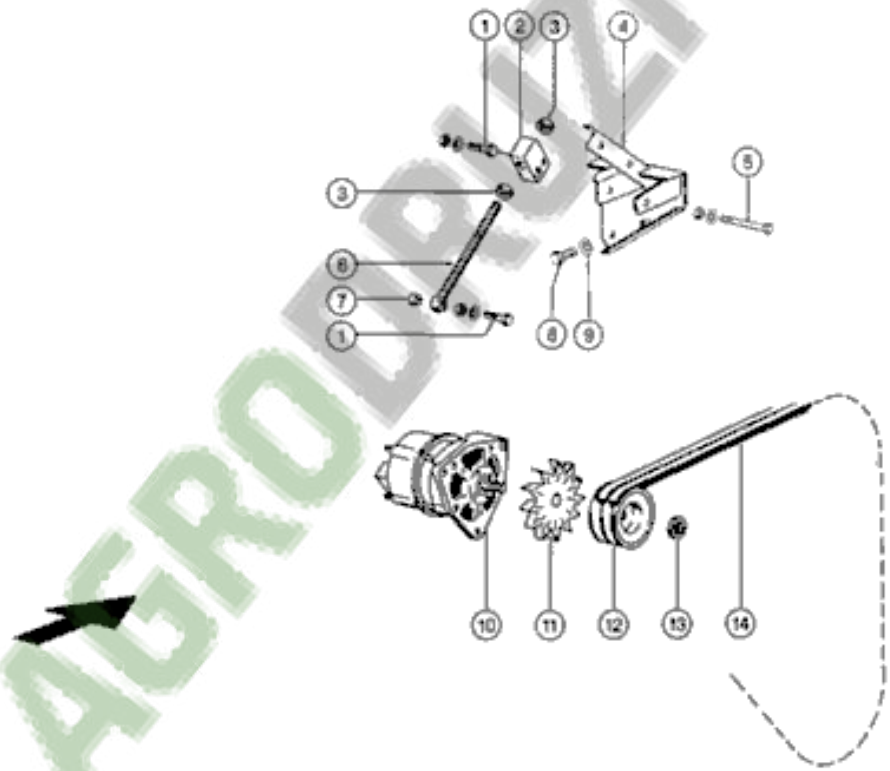


AGRODRUZI

101540

Dominator 88 VX

# Übersichten

AGRODRUZI

CLAAS

500

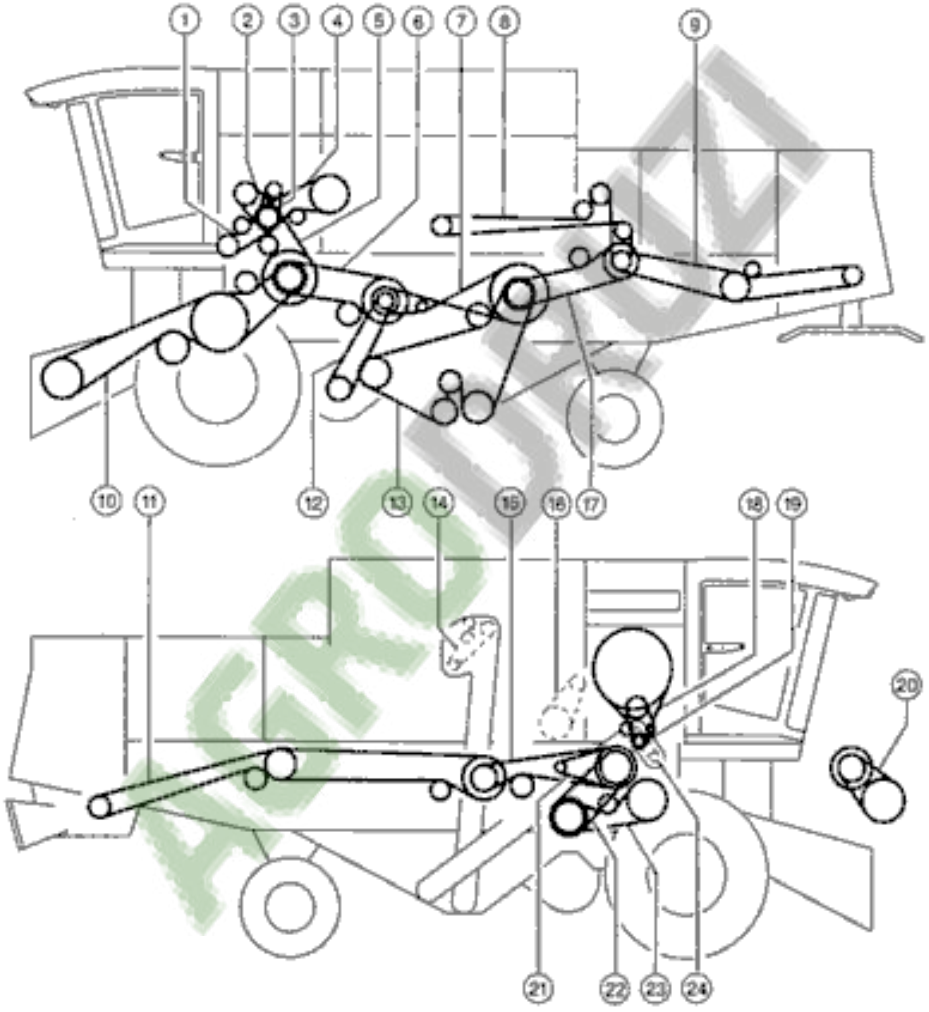


101541

Dominator 88 VX

AGRODRUZI

AGRODRUZI